HIWIN®
Motion Control & Systems

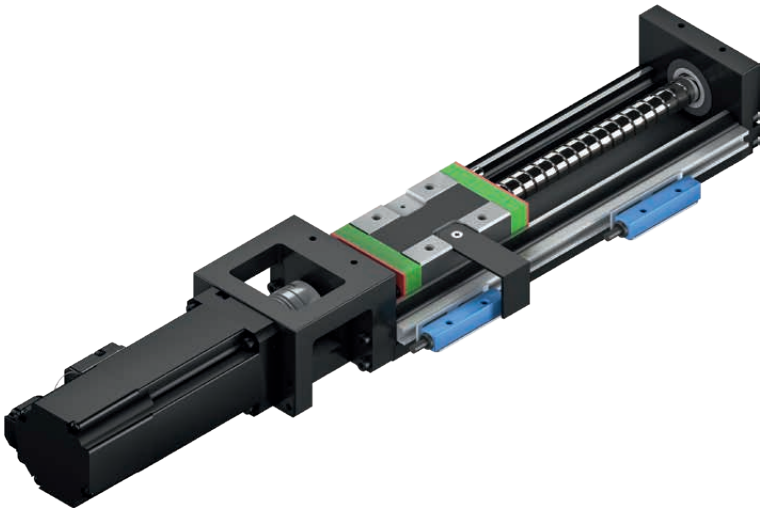

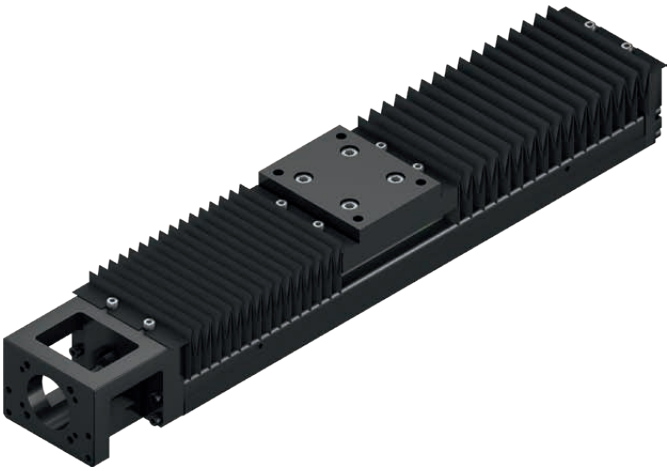

Assembly Instructions

KK Linear Axes

www.hiwin.de

HIWIN GmbH
Brücklesbünd 2
77654 Offenburg
Germany
Phone +49 (0) 7 81 9 32 78 - 0
Fax +49 (0) 7 81 9 32 78 - 90
info@hiwin.de
www.hiwin.de

All rights reserved.
Complete or partial reproduction
is not permitted without our permission.

These assembly instructions are protected by copyright.
Any reproduction, publication in whole or in part, modification or abridgement requires the written approval of HIWIN GmbH.

Contents

1. General information 4
1.1 About these assembly instructions 4
1.2 Depictions used in these assembly instructions 5
1.3 Warranty and liability 7
1.4 Manufacturer's details 7
1.5 Copyright 7
1.6 Product monitoring 7

2. Basic safety notices 8
2.1 Intended use 8
2.2 Reasonably foreseeable misuse 8
2.3 Conversions and modifications 8
2.4 Residual risks 8
2.5 Personnel requirements 8
2.6 Protective equipment 9
2.7 Labels on the linear axis system 9

3. Description of the KK linear axes 10
3.1 Field of application 10
3.2 Design of the KK linear axes 10
3.3 Functional description 12

4. Product specifications 16
4.1 KK linear axes 16
4.2 Servo motors 18
4.3 Servo drive 25

5. Transport and installation 27
5.1 Delivery 27
5.2 Transport to the installation site 27
5.3 Requirements at the installation site 28
5.4 Storage 28
5.5 Unpacking and installing 28
5.6 Storage of motor and servo drive 29
5.7 Further informations 29

6. Assembly and connection 30
6.1 Assembly of the KK linear axis 30
6.2 Assembly of a moved load 31
6.3 Electrical connection 32
6.4 Motor connection 34
6.5 Limit switch connection 36
6.6 Power supply – typical values 37
6.7 Parking brake connection 37
6.8 Assembly of aluminium cover 38
6.9 Assembly of bellow cover 38
6.10 Assembly of cross table adapter 39

7. Commissioning 40
7.1 Switching on the linear axis system 40
7.2 Programming 40

8. Maintenance and cleaning 41
8.1 Linear guideway and shaft 41
8.2 Electromagnetic components 44

9. Faults 45
9.1 Faults with the motor 45
9.2 Faults during operation with drive amplifier 45

10. Disassembly 46

11. Disposal 47

12. Appendix 1: Order code of linear axes KK 48

13. Appendix 2: Technical data 50
13.1 KK linear axes 50
13.2 Servo motors 77

14. Appendix 3: Spare parts lists 79

15. Appendix 4: Declaration of Incorporation 86

1. General information

1.1 About these assembly instructions

These assembly instructions are intended for planners, developers and operators of systems who plan for and install KK linear axes as machine elements. They are also intended for persons who perform the following tasks:

- Transportation
- Assembly
- Electrical connection including connection to the higher-level control system
- Integration into a security system
- Retrofitting or upgrading
- Setup
- Commissioning
- Operation
- Cleaning
- Maintenance
- Troubleshooting and error elimination
- Shutdown, disassembly and disposal

1.1.1 Version management

Table 1.1 **Version management**

Version	Date	Notes
04-1	September 2019	Update of technical data and spare parts lists
04-0	March 2018	General update, addition of KK30
03-4	December 2016	Updates and additions
03-3	October 2016	Update of "Declaration of incorporation"
03-2	January 2016	Update of "Declaration of incorporation"
03-1	July 2015	Updates and additions
03-0	June 2015	Layout adaptations, update of technical data
02-0	November 2013	Update of technical data
01-0	July 2011	Initial creation of common assembly instructions for KK linear axes

1.1.2 Requirements

We assume that

- operating personnel are trained in the safe operation practices for KK linear axes, and have read and understood these assembly instructions in full;
- maintenance personnel maintain and repair the KK linear axes in such a way that they pose no danger to people, property or the environment.

1.1.3 Availability

These assembly instructions must remain constantly available to all persons who work with or on the KK linear axes.

1.2 Depictions used in these assembly instructions

1.2.1 Instructions

Instructions are indicated by triangular bullet points in the order in which they are to be carried out.
Results of the actions carried out are indicated by ticks.

Example:

- ▶ Produce appropriate mounting holes on the mounting surface if not already present
- ▶ Clean mounting surface and position KK linear axis on it
- ▶ Set the KK linear axis firmly against the reference edge
- ▶ Screw the mounting bolts in all mounting holes, proceeding from inside to outside in a spiral sequence

✓ KK linear axis is mounted.

1.2.2 Lists

Lists are indicated by bullet points.

Example:
KK linear axes must not be operated:

- Outdoors
- In potentially explosive atmospheres
- ...

1.2.3 Depiction of safety notices

Safety notices are always indicated using a signal word and sometimes also a symbol for the specific risk (see chapter 1.2.4 "Symbols used").
The following signal words and risk levels are used:

⚠ DANGER!
Imminent danger! Noncompliance with the safety notices will result in serious injury or death!

⚠ WARNING!
Potentially dangerous situation! Noncompliance with the safety notices runs the risk of serious injury or death!

⚠ CAUTION!
Potentially dangerous situation! Noncompliance with the safety notices runs the risk of slight to moderate injury!

ATTENTION!
Potentially dangerous situation! Noncompliance with the safety notices runs the risk of damage to property or environmental pollution!

1.2.4 Symbols used

The following symbols are used in these assembly instructions and on the KK linear axes:

Table 1.2 **Warning signs**

	Warning of dangerous electrical voltage!		Warning of crushing!
	Warning of cutting injuries!		Warning of danger from suspended loads!
	Substance hazardous to the environment!		

Table 1.3 **Mandatory signs**

	Isolate before work!

1.2.5 Information

NOTE Describes general information and recommendations.

1.3 Warranty and liability

The manufacturer's "General conditions of sale and delivery" apply.

1.4 Manufacturer's details

Table 1.4 **Manufacturer's details**

Address	HIWIN GmbH, Brücklesbünd 2, 77654 Offenburg
Phone	+49 (0) 781 932 78-0
Technical customer service	+49 (0) 781 932 78-77
Fax	+49 (0) 781 932 78-90
Technical customer service fax	+49 (0) 781 932 78-97
E-mail	support@hiwin.de
Website	www.hiwin.de

1.5 Copyright

These assembly instructions are protected by copyright. Any reproduction, publication in whole or in part, modification or abridgement requires the written approval of HIWIN GmbH.

1.6 Product monitoring

Please inform HIWIN, the manufacturer of the KK linear axes, of:

- Accidents
- Potential sources of danger in the KK linear axes
- Anything in these assembly instructions which is difficult to understand

2. Basic safety notices

⚠ WARNING!

This chapter serves to ensure the safety of everyone working with KK linear axes and those who assemble, install, operate, maintain or disassemble them. Non-compliance with the following information results in dangerous working conditions.

2.1 Intended use

The KK linear axis is a linear drive and guiding system for the precise timing and positioning of securely mounted loads inside an automated system.
Several KK linear axes can be mounted on top of one another to create cross tables.
In the case of vertical assembly, a suitable clamping or braking device must be provided in order to prevent unintended lowering of the load.
The KK linear axes may only be used for the intended purpose as described.

- KK linear axes must be operated within their specified performance limits (see chapter 4 "Product specifications").
- Proper use of the KK linear axes includes observing the assembly instructions and following the maintenance and repair specifications.
- KK linear axes must not be operated in potentially explosive atmospheres.
- The KK linear axes may only be used and operated indoors.
- Use of the KK linear axes for any other purpose shall be considered improper use.

The KK linear axes are delivered as a system. Therefore observe the whole documentation for this system. The provided documentation may vary depending on the linear axis type.

2.2 Reasonably foreseeable misuse

KK linear axes must not be operated:

- Outdoors
- In potentially explosive atmospheres

2.3 Conversions and modifications

Conversions or modifications to the KK linear axes are not permitted.

2.4 Residual risks

During normal operation, there are no residual risks associated with the KK linear axes. Warnings about risks that may arise during maintenance and repair work are provided in the relevant sections.

2.5 Personnel requirements

Only authorised and competent persons may carry out work on the KK linear axes. They must be familiar with the safety equipment and regulations before starting work (see Table 2.1).

Table 2.1 **Personnel requirements**

Activity	Qualification
Normal operation	Trained personnel
Cleaning	Trained personnel
Maintenance	Trained specialist personnel of the operator or manufacturer
Repairs	Trained specialist personnel of the operator or manufacturer
Transportation	Trained personnel
Assembly	Trained specialist personnel
Disassembly	Trained specialist personnel

2.6 Protective equipment

Table 2.2 **Personal protective equipment**

Operating phase	Personal protective equipment
Normal operation	When in the vicinity of the KK linear axes, the following personal protective equipment is required: ○ Safety shoes
Cleaning	When cleaning the KK linear axes, the following personal protective equipment is required: ○ Safety shoes
Maintenance and repairs	When carrying out maintenance and repairs, the following personal protective equipment is required: ○ Safety shoes

2.7 Labels on the linear axis system

2.7.1 Warning symbols

Table 2.3 **Warning symbols**

Pictogram	Type and source of danger	Protective measures
	Danger of electric shock!	Disconnect the power supply of the KK linear axis systems before maintenance or repairs!
	Danger from hot surfaces!	Let hot surfaces cool down before touching them!

2.7.2 Type plate

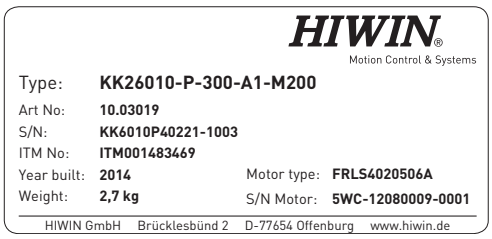

Fig. 2.1 **Type plate (example only)**

3. Description of the KK linear axes

3.1 Field of application

The KK linear axis is used for traversing and (linear) movement of fixed mounted loads on the carriage. It can be mounted horizontally or, with the aid of clamping or braking devices, vertically.

3.2 Design of the KK linear axes

The KK linear axes consist of components depicted as examples in Fig. 3.1. The configuration ready for operation is depicted in Fig. 3.2, Fig. 3.3 and Fig. 3.4.

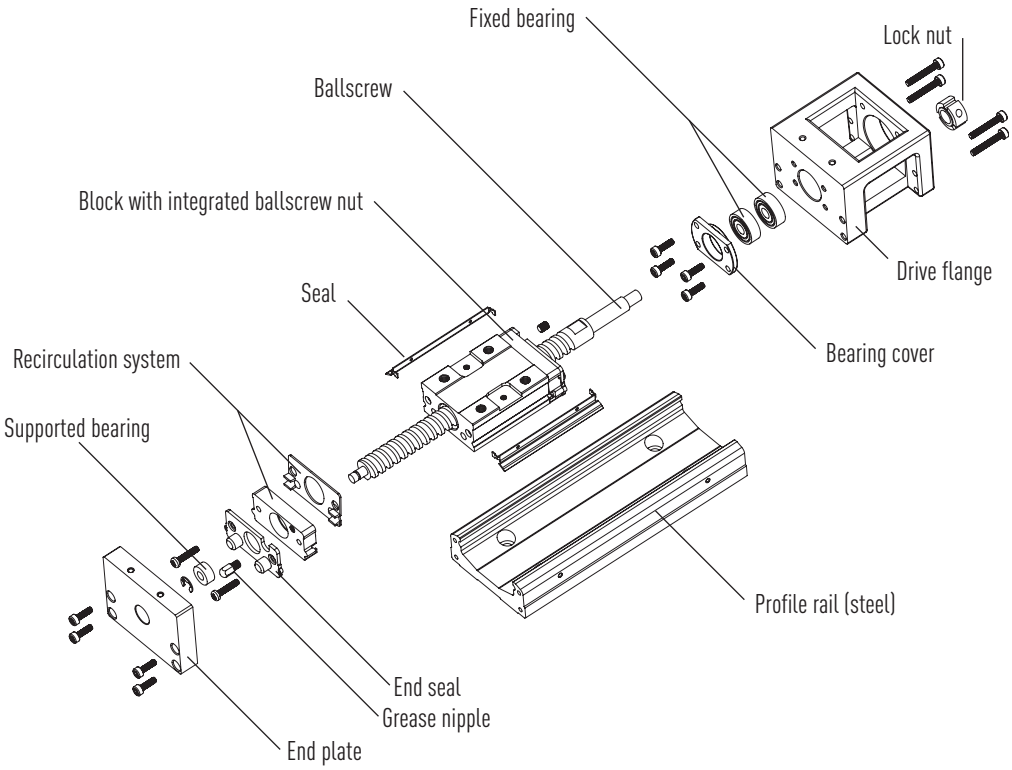

Fig. 3.1 **Design of the KK linear axes**

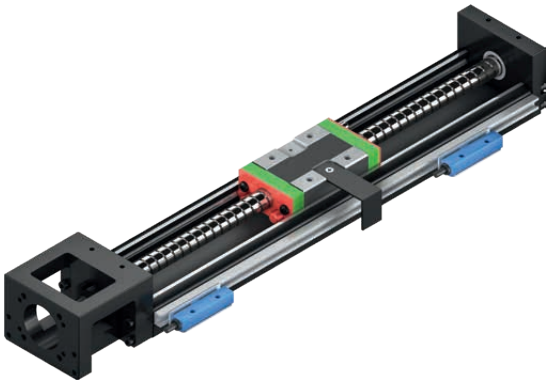

Fig. 3.2 **Example KK linear axis without motor, with limit switch**

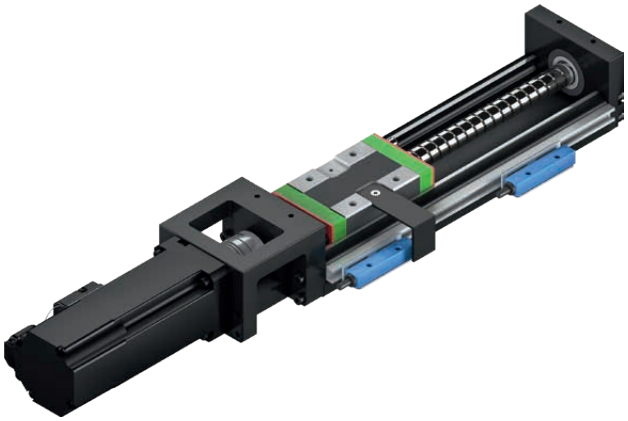

Fig. 3.3 **Example KK linear axis without motor, with limit switch**

Fig. 3.4 **Example KK linear axis with motor, limit switch, and controller**

3.3 Functional description

The HIWIN KK linear axes are compact positioning axes. The feed is generated with a ballscrew mounted in a drive flange. The movement takes place over a special linear guideway. Owing to the recirculation ball guide on the carriage in the steel profile and the recirculation ball system nut integrated in this, the KK linear axis achieves very high load ratings and a high rigidity with the minimum friction and idle torques. The KK linear axis can be delivered as a basic axis as depicted in Fig. 3.2, including servo motor as depicted in Fig. 3.3, or as a complete axis with servo motor and drive controller as depicted in Fig. 3.4
Depending on the application, there are a range of sizes and the following optional accessories available:

- Limit switch
- Second block
- Aluminium cover
- Bellow cover
- Motor adapter flanges

KK linear axes are delivered as completely assembled units. On request, the optional accessories can be delivered separately. To prevent damage to the linear axes, please observe the safety instructions in chapter 5.3.
The mounting surface must be flat and level. The required levelness must not exceed 0.03 mm over 300 mm.

Typical properties

- Horizontal installations possible
- Vertical installations possible with suitable clamping or braking device
- Use in cross tables possible
- Application with high accuracy
- Compact design

3.3.1 Motors (optional)

The motors installed in the linear axes type KK are brushless three-phase synchronous motors. For details, see chapter 4 "Product specifications". The maximum motor force is limited at high speeds by the available intermediate circuit voltage. When the speeds of movements are greater than the maximum speed specified for the motor type (at peak force), it may be necessary to have the cycle examined by HIWIN. The linear axis KK is equipped with a 17-bit absolute encoder (singleturn or multiturn). Please observe the accompanying documentation for the used distance measuring system.

3.3.2 Limit/reference switches (optional)

The KK linear axis features two optical or inductive PNP-switching proximity switches that generate a signal to the controller upon reaching the end of the travel distance. The limit switches are supplied with all cabling connected and are ready for operation. The limit switches are mounted on a sensor rail secured to the KK linear axis and can be positioned freely. When delivered, the proximity switches are mounted on the sensor rail and are ready for operation.

- Cable length 2 m/4 m
- Open cable end
- Optionally with Sub-D connection.

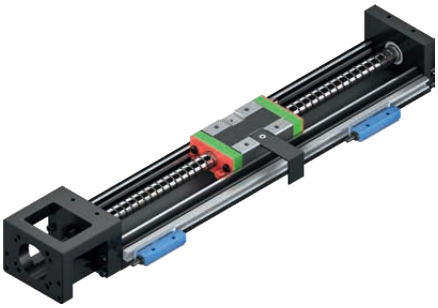

Fig. 3.5 **KK linear axis with limit/reference switch**

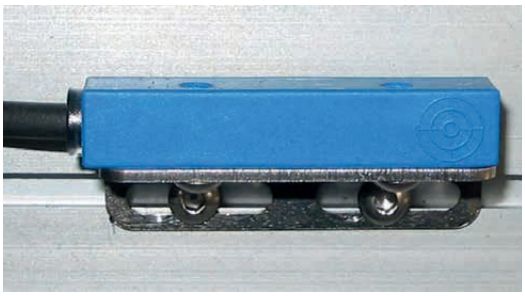

Fig. 3.6 **Inductive proximity switch on mounting**

Table 3.1 **Technical data of the limit/reference switch**

Inductive	
Switching distance	2 mm
Correction factor V2A/brass/Aluminium	1.16/0.70/0.67
Installation type	Flush
Switch hysteresis	< 10 %
Electrical	
Power supply	10 to 30 VDC
Power input (Ub = 24 V)	< 8 mA
Switching frequency	930 Hz
Temperature drift	< 10 %
Operating temperature	–25 to +80 °C
Voltage drop switch output	< 1 V
Switching current	100 mA
Residual current voltage drop	< 100 µA
Short circuit protection	Yes
Reverse polarity protection	Yes
Overload protection	Yes
Mechanical	
Housing material	Plastic
Full encapsulation	Yes
Protection mode	IP67
Connection type	Cable
Cable length	4 m, 2 m
Protection class	III

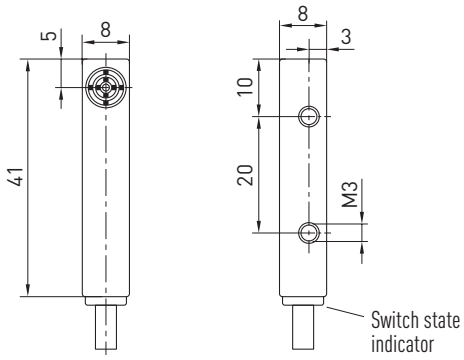

Fig. 3.7 **Scale drawing of the reference switch**

The proximity switch is secured to the sensor rail with M3 screws. The tightening torque is 1.8 Nm.

3.3.3 Energy chain (optional)

- Safe and protected cable routing
- Available in standard size or to suit customer needs
- Supplied assembled and ready for use

Please observe manufacturer's instructions for retrofitting.

3.3.4 Covers (optional)

There are optional aluminium sheet metal covers available for all KK linear axis sizes. In addition, there are bellow covers available for the sizes KK60 and KK86. The covers are fitted as standard on delivery.

3.3.5 Motor adapter flange (optional)

The KK linear axis is delivered as standard with the motor adapter flange F0. A range of adapter flanges are available for each of the sizes. The additional adapter flanges F1, F2, F3, etc. are delivered mounted on the standard motor adapter flange F0.

3.3.6 Motor brake (optional)

All HIWIN servo motors can be delivered with the optional motor brake. The used brakes are suitable for emergency stops, i.e. they engage when unenergised.
The brake is mounted on the motor's second shaft. The overall dimensions of the linear axis therefore changes.
For details, see chapter 13.2 "Servo motors".

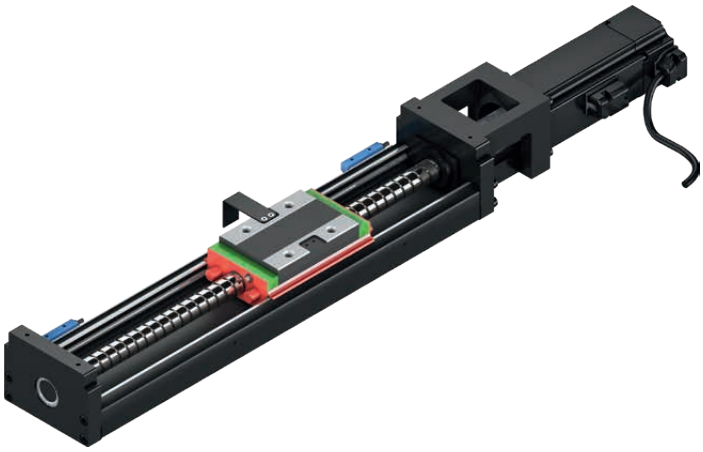

Fig. 3.8 **KK linear axis with HIWIN servo motor and motor brake**

3.3.7 Servo drive (option)

ATTENTION!

Risk of material damage!

- Do not operate the drive in non-earthed networks or networks with unsymmetrical earthing with a voltage of more than >230 V!
- Operate the drive only in a closed switch cabinet under the defined ambient conditions!

The drives of the D2T family are suited for operating brushless synchronous servo motors such as AC servo motors in force torque regulation, speed and/or position regulation.

- The drives of the D2T series can be connected directly to single-phase or three-phase, earthed industrial networks (110–230 V).
- Only use copper cables for wiring in the switch cabinet.

Further details on the drive can be found in the Assembly and Commissioning Instructions "D2 Servo Drive Amplifier" at www.hiwin.de.

4. Product specifications

4.1 KK linear axes

4.1.1 Accuracy and maximum values of KK linear axes

Table 4.1 **Accuracy and maximum values of KK linear axes with and without servo motor**

Model	Lead [mm]	L1 [mm]	V_{max} [mm/s]		a_{max} [m/s²]	Positioning accuracy [mm]	Repeat-ability [mm]	Guideway parallelism [mm]	Starting torque [Nmm]
			Without motor	With HIWIN motor					
KK3001P0075	1	129	160	—	5	0.020	± 0.003	0.010	12
KK3001P0100	1	154	160	—	5	0.020	± 0.003	0.010	12
KK3001P0125	1	179	160	—	5	0.020	± 0.003	0.010	12
KK3001P0150	1	204	160	—	5	0.020	± 0.003	0.010	12
KK3001P0175	1	229	160	—	5	0.020	± 0.003	0.010	12
KK3001P0200	1	254	160	—	5	0.020	± 0.003	0.010	12
KK4001P0100	1	159	190	75	5	0.020	± 0.003	0.010	12
KK4001P0150	1	209	190	75	5	0.020	± 0.003	0.010	12
KK4001P0200	1	259	190	75	5	0.020	± 0.003	0.010	12
KK5002P0150	2	220	270	150	5	0.020	± 0.003	0.010	40
KK5002P0200	2	270	270	150	5	0.020	± 0.003	0.010	40
KK5002P0250	2	320	270	150	5	0.020	± 0.003	0.010	40
KK5002P0300	2	370	270	150	5	0.020	± 0.003	0.010	40
KK6005P0150	5	220	550	375	15	0.020	± 0.003	0.010	150
KK6005P0200	5	270	550	375	15	0.020	± 0.003	0.010	150
KK6005P0300	5	370	550	375	15	0.020	± 0.003	0.010	150
KK6005P0400	5	470	550	375	15	0.020	± 0.003	0.010	150
KK6005P0500	5	570	550	375	15	0.025	± 0.003	0.015	150
KK6005P0600	5	670	340	340	15	0.025	± 0.003	0.015	150
KK6010P0150	10	220	1,100	750	15	0.020	± 0.003	0.010	150
KK6010P0200	10	270	1,100	750	15	0.020	± 0.003	0.010	150
KK6010P0300	10	370	1,100	750	15	0.020	± 0.003	0.010	150
KK6010P0400	10	470	1,100	750	15	0.020	± 0.003	0.010	150
KK6010P0500	10	570	1,100	750	15	0.025	± 0.003	0.015	150
KK6010P0600	10	670	670	670	15	0.025	± 0.003	0.015	150
KK8610P0340	10	440	740	740	15	0.025	± 0.003	0.015	150
KK8610P0440	10	540	740	740	15	0.025	± 0.003	0.015	150
KK8610P0540	10	640	740	740	15	0.025	± 0.003	0.015	150
KK8610P0640	10	740	740	740	15	0.025	± 0.003	0.015	150
KK8610P0740	10	840	740	740	15	0.030	± 0.003	0.020	170
KK8610P0940	10	1,040	610	610	15	0.040	± 0.003	0.030	250
KK8620P0340	20	440	1,480	1,480	15	0.025	± 0.003	0.015	150
KK8620P0440	20	540	1,480	1,480	15	0.025	± 0.003	0.015	150
KK8620P0540	20	640	1,480	1,480	15	0.025	± 0.003	0.015	150
KK8620P0640	20	740	1,480	1,480	15	0.025	± 0.003	0.015	150
KK8620P0740	20	840	1,480	1,480	15	0.030	± 0.003	0.020	170
KK8620P0940	20	1,040	1,220	1,220	15	0.040	± 0.003	0.030	250
KK10020P0980	20	1,089	1,120	1,120	15	0.035	± 0.005	0.025	170
KK10020P1080	20	1,189	980	980	15	0.035	± 0.005	0.025	170
KK10020P1180	20	1,289	750	750	15	0.040	± 0.005	0.030	200
KK10020P1280	20	1,389	630	630	15	0.045	± 0.005	0.035	230
KK10020P1380	20	1,489	530	530	15	0.050	± 0.005	0.040	250

Table 4.1 **Accuracy and maximum values of KK linear axes with and without servo motor**

Model	Lead [mm]	L1 [mm]	V_{max} [mm/s]		a_{max} [m/s²]	Positioning accuracy [mm]	Repeat-ability [mm]	Guideway parallelism [mm]	Starting torque [Nmm]
			Without motor	With HIWIN motor					
KK13025P0980	25	1,098	1,120	1,120	15	0.035	± 0.005	0.025	250
KK13025P1180	25	1,298	1,120	1,120	15	0.040	± 0.005	0.030	250
KK13025P1380	25	1,498	830	830	15	0.040	± 0.005	0.030	250
KK13025P1680	25	1,798	550	550	15	0.050	± 0.007	0.040	270

The use of bellow covers may pose restrictions on the maximum acceleration.

NOTE

4.1.2 Load ratings and torques of KK linear axes

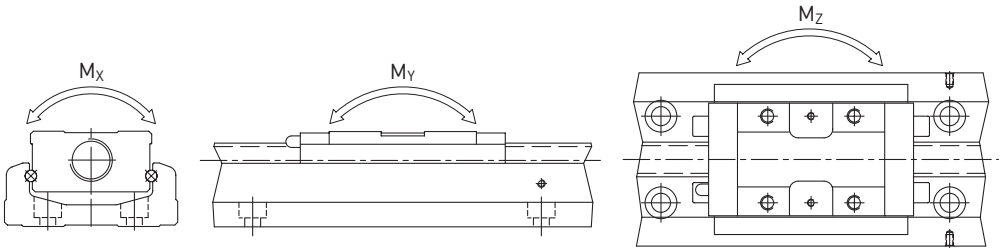

Table 4.2 **Load ratings of KK linear axes: linear guideway, standard block**

Model	C_{dyn} [N]	C_0 [N]	Block A1			Block A2		
			M_X [Nm]	M_Y [Nm]	M_Z [Nm]	M_X [Nm]	M_Y [Nm]	M_Z [Nm]
KK30	2,210	3,510	41	14	14	82	73	73
KK40	3,920	6,468	81	33	33	162	182	182
KK50	8,007	12,916	222	116	116	444	545	545
KK60	13,230	21,462	419	152	152	838	760	760
KK86	31,458	50,764	1,507	622	622	3,014	3,050	3,050
KK100	39,200	63,406	2,205	960	960	4,410	4,763	4,763
KK130	48,101	84,829	3,885	1,536	1,536	7,770	7,350	7,350

Table 4.3 **Load ratings of KK linear axes: linear guideway, short block**

Model	C_{dyn} [N]	C_0 [N]	Block S1			Block S2		
			M_X [Nm]	M_Y [Nm]	M_Z [Nm]	M_X [Nm]	M_Y [Nm]	M_Z [Nm]
KK60	7,173	11,574	241	72	72	482	367	367
KK86	21,051	29,475	847	166	166	1,694	1,309	1,309

Table 4.4 **Load ratings of KK linear axes: ballscrew and fixed bearing**

Model	Shaft			Fixed bearing	
	Ø [mm]	C_{dyn} [N]	C_0 [N]	$C_{0\ axial}$ [N]	$F_{max\ axial}$ [N]
KK3001Pxxxx	6	647	1,088	—	—
KK4001Pxxxx	8	735	1,538	1,910	750
KK5002Pxxxx	8	2,136	3,489	1,910	1,500
KK6005Pxxxx	12	3,744	6,243	4,480	3,120
KK6010Pxxxx	12	2,410	3,743	4,480	1,870
KK8610Pxxxx	15	7,144	12,642	9,240	6,320
KK8620Pxxxx	15	4,645	7,655	9,240	3,825
KK10020Pxxxx	20	7,046	12,544	10,600	6,270
KK13025Pxxxx	25	7,897	15,931	18,485	7,950

Table 4.5 **Area moment of inertia of KK linear axes**

Model	Area moment of inertia [mm⁴]	
	I_x	I_y
KK30	7.554×10^2	1.273×10^4
KK40	3.533×10^3	5.317×10^4
KK50	9.600×10^3	1.340×10^5
KK60	2.056×10^4	2.802×10^5
KK86	7.445×10^4	1.134×10^6
KK100	1.296×10^5	2.035×10^6
KK130	2.546×10^5	5.073×10^6

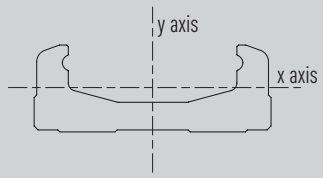

4.2 Servo motors

Table 4.6 **Assignment of flange type to motor type**

Motor output	Motor type	Flange type					
		KK40	**KK50**	**KK60**	**KK86**	**KK100**	**KK130**
50 W	FRLS05	F2	F2	F2			
100 W	FRLS10	F2	F2	F2			
200 W	FRLS20				F0	F0	F1
400 W	FRMS40				F0	F0	F1
750 W	FRMS75					F1	F2
1,000 W	FRMM1K						F5

4.2.1 AC servo motor FRLS 50 W

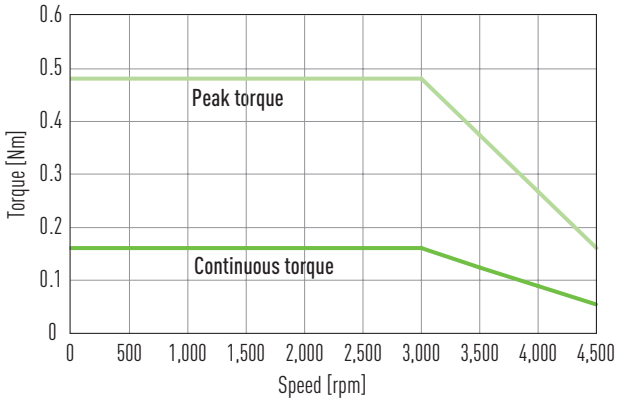

Fig. 4.1 **Torque-speed curve FRLS 50 W**

Table 4.7 **Technical data FRLS 50 W**

Motor data	Symbol	Unit	FRLS052 _ _A4 _
Nominal voltage	V	VAC	220
Nominal power	W	W	50
Nominal torque	T_C	Nm	0.16
Nominal current	I_C	A_{eff}	0.9
Peak torque for 1 sec.	T_P	Nm	0.48
Peak current for 1 sec.	I_P	A_{eff}	2.7
Nominal speed	n_N	rpm	3,000
Maximum speed for 1 sec.	n_{max}	rpm	4,500
Torque constant	K_T	Nm/A_{eff}	0.178
Voltage constant	K_e	V_{eff}/(1,000 rpm)	10.74
Winding resistance [1]	R	Ω	4.7
Winding inductance [1]	L	mH	4.7
Mass inertia of rotor	J	$kgm^2 \times 10^{-4}$	0.02
Mass inertia of rotor with brake	J	$kgm^2 \times 10^{-4}$	0.022
Motor weight	M	kg	0.45
Motor weight with brake	M	kg	0.58
Motor insulation class			A
Motor brake (optional) [2]			
Braking torque (static)	T_b	Nm	0.3
Power supply	V	VDC	24 ± 10 %
Power consumption	A	A	0.3
Rated input	W	W	6.0
Response time open	t_0	ms	30.0
Response time close	t_R	ms	20.0

[1] Line to line
[2] The motor brakes are holding brakes only, not operating brakes

4.2.2 AC servo motor FRLS 100 W

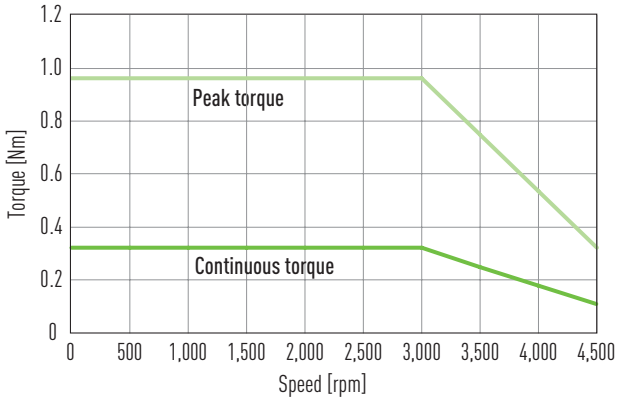

Fig. 4.2 **Torque-speed curve FRLS 100 W**

Table 4.8 **Technical data FRLS 100 W**

Motor data	Symbol	Unit	FRLS102 _ _A4 _
Nominal voltage	V	VAC	220
Nominal power	W	W	100
Nominal torque	T_C	Nm	0.32
Nominal current	I_C	A_{eff}	0.9
Peak torque for 1 sec.	T_P	Nm	0.96
Peak current for 1 sec.	I_P	A_{eff}	2.7
Nominal speed	n_N	rpm	3,000
Maximum speed for 1 sec.	n_{max}	rpm	4,500
Torque constant	K_T	Nm/A_{eff}	0.356
Voltage constant	K_e	V_{eff}/(1,000 rpm)	21.98
Winding resistance [1]	R	Ω	8
Winding inductance [1]	L	mH	8.45
Mass inertia of rotor	J	$kgm^2 \times 10^{-4}$	0.036
Mass inertia of rotor with brake	J	$kgm^2 \times 10^{-4}$	0.038
Motor weight	M	kg	0.63
Motor weight with brake	M	kg	0.76
Motor insulation class			A
Motor brake (optional) [2]			
Braking torque (static)	T_b	Nm	0.3
Power supply	V	VDC	24 ± 10 %
Power consumption	A	A	0.3
Rated input	W	W	6.0
Response time open	t_0	ms	30.0
Response time close	t_R	ms	20.0

[1] Line to line
[2] The motor brakes are holding brakes only, not operating brakes

4.2.3 AC servo motor FRLS 200 W

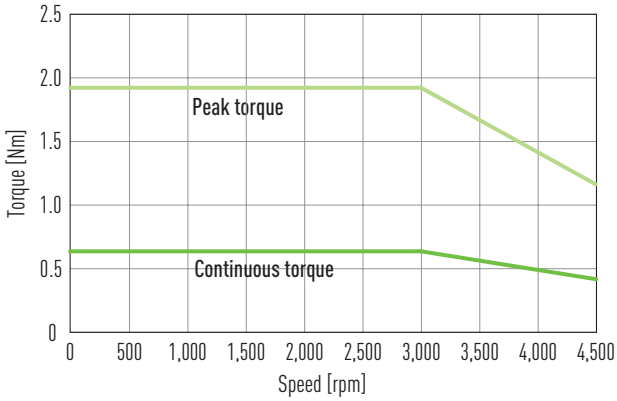

Fig. 4.3 **Torque-speed curve FRLS 200 W**

Table 4.9 **Technical data FRLS 200 W**

Motor data	Symbol	Unit	FRLS202 _ _06_
Nominal voltage	V	VAC	220
Nominal power	W	W	200
Nominal torque	T_C	Nm	0.64
Nominal current	I_C	A_{eff}	1.7
Peak torque for 1 sec.	T_P	Nm	1.92
Peak current for 1 sec.	I_P	A_{eff}	5.1
Nominal speed	n_N	rpm	3,000
Maximum speed for 1 sec.	n_{max}	rpm	4,500
Torque constant	K_T	Nm/A_{eff}	0.43
Voltage constant	K_e	V_{eff}/(1,000 rpm)	26
Winding resistance [1]	R	Ω	4.3
Winding inductance [1]	L	mH	13
Mass inertia of rotor	J	$kgm^2 \times 10^{-4}$	0.17
Mass inertia of rotor with brake	J	$kgm^2 \times 10^{-4}$	0.21
Motor weight	M	kg	0.95
Motor weight with brake	M	kg	1.5
Motor insulation class			A
Motor brake (optional) [2]			
Braking torque (static)	T_b	Nm	1.3
Power supply	V	VDC	24 ± 10 %
Power consumption	A	A	0.3
Rated input	W	W	7.7
Response time open	t_0	ms	30.0
Response time close	t_R	ms	20.0

[1] Line to line
[2] The motor brakes are holding brakes only, not operating brakes

4.2.4 AC servo motor FRMS 400 W

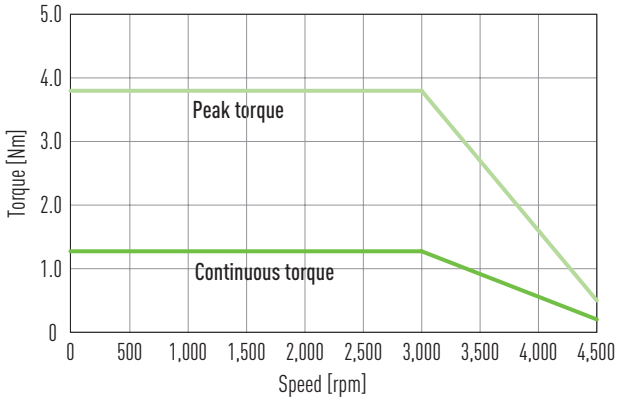

Fig. 4.4 **Torque-speed curve FRMS 400 W**

Table 4.10 **Technical data FRMS 400 W**

Motor data	Symbol	Unit	FRMS402 _ _06 _
Nominal voltage	V	VAC	220
Nominal power	W	W	400
Nominal torque	T_C	Nm	1.27
Nominal current	I_C	A_{eff}	2.6
Peak torque for 1 sec.	T_P	Nm	3.81
Peak current for 1 sec.	I_P	A_{eff}	7.8
Nominal speed	n_N	rpm	3,000
Maximum speed for 1 sec.	n_{max}	rpm	4,500
Torque constant	K_T	Nm/A_{eff}	0.48
Voltage constant	K_e	V_{eff}/(1,000 rpm)	29.61
Winding resistance [1]	R	Ω	4.13
Winding inductance [1]	L	mH	9.9
Mass inertia of rotor	J	$kgm^2 \times 10^{-4}$	0.44
Mass inertia of rotor with brake	J	$kgm^2 \times 10^{-4}$	0.48
Motor weight	M	kg	1.31
Motor weight with brake	M	kg	1.86
Motor insulation class			A
Motor brake (optional) [2]			
Braking torque (static)	T_b	Nm	1.3
Power supply	V	VDC	24 ± 10 %
Power consumption	A	A	0.3
Rated input	W	W	7.7
Response time open	t_0	ms	30.0
Response time close	t_R	ms	20.0

[1] Line to line
[2] The motor brakes are holding brakes only, not operating brakes

4.2.5 AC servo motor FRMS 750 W

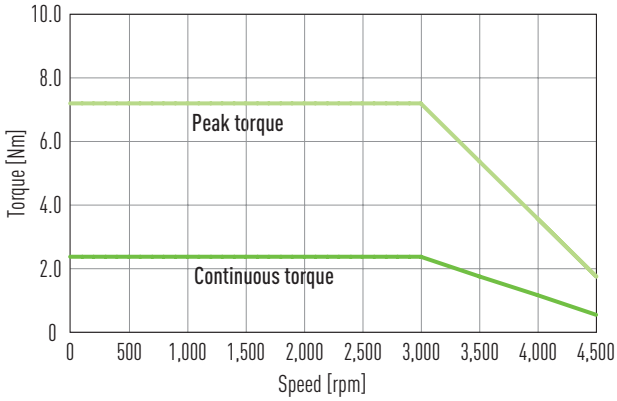

Fig. 4.5 **Torque-speed curve FRMS 750 W**

Table 4.11 **Technical data FRMS 750 W**

Motor data	Symbol	Unit	FRMS752 _ _08_
Nominal voltage	V	VAC	220
Nominal power	W	W	750
Nominal torque	T_C	Nm	2.4
Nominal current	I_C	A_{eff}	5.1
Peak torque for 1 sec.	T_P	Nm	7.2
Peak current for 1 sec.	I_P	A_{eff}	15.3
Nominal speed	n_N	rpm	3,000
Maximum speed for 1 sec.	n_{max}	rpm	4,500
Torque constant	K_T	Nm/A_{eff}	0.47
Voltage constant	K_e	V_{eff}/(1,000 rpm)	28.4
Winding resistance [1]	R	Ω	0.813
Winding inductance [1]	L	mH	3.4
Mass inertia of rotor	J	$kgm^2 \times 10^{-4}$	1.4
Mass inertia of rotor with brake	J	$kgm^2 \times 10^{-4}$	1.46
Motor weight	M	kg	2.66
Motor weight with brake	M	kg	3.32
Motor insulation class			A
Motor brake (optional) [2]			
Braking torque (static)	T_b	Nm	2.4
Power supply	V	VDC	24 ± 10 %
Power consumption	A	A	0.4
Rated input	W	W	8.6
Response time open	t_0	ms	45.0
Response time close	t_R	ms	10.0

[1] Line to line
[2] The motor brakes are holding brakes only, not operating brakes

4.2.6 AC servo motor FRMM 1,000 W

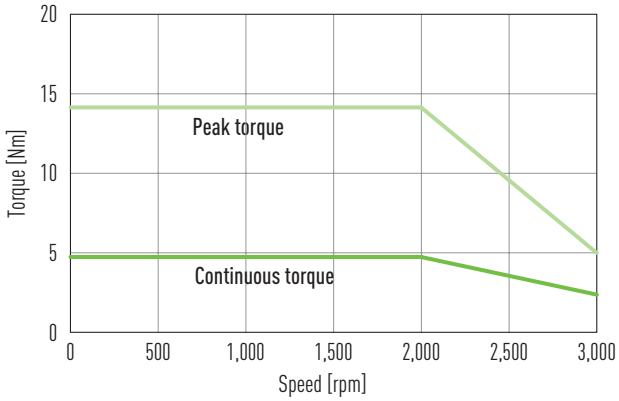

Fig. 4.6 **Torque-speed curve FRMM 1,000 W**

Table 4.12 **Technical data FRMM 1,000 W**

Motor data	Symbol	Unit	FRMM1K2 _ _13_
Nominal voltage	V	VAC	220
Nominal power	W	W	1,000
Nominal torque	T_C	Nm	4.77
Nominal current	I_C	A_{eff}	5.1
Peak torque for 1 sec.	T_P	Nm	14.3
Peak current for 1 sec.	I_P	A_{eff}	15.3
Nominal speed	n_N	rpm	2,000
Maximum speed for 1 sec.	n_{max}	rpm	3,000
Torque constant	K_T	Nm/A_{eff}	0.94
Voltage constant	K_e	V_{eff}/(1,000 rpm)	54.7
Winding resistance [1]	R	Ω	0.81
Winding inductance [1]	L	mH	8
Mass inertia of rotor	J	$kgm^2 \times 10^{-4}$	7.6
Mass inertia of rotor with brake	J	$kgm^2 \times 10^{-4}$	8.7
Motor weight	M	kg	5.4
Motor weight with brake	M	kg	6.2
Motor insulation class			A
Motor brake (optional) [2]			
Braking torque (static)	T_b	Nm	10
Power supply	V	VDC	24 ± 10 %
Power consumption	A	A	0.6
Rated input	W	W	13.4
Response time open	t_0	ms	80.0
Response time close	t_R	ms	30.0

[1] Line to line
[2] The motor brakes are holding brakes only, not operating brakes

4.3 Servo drive

Table 4.13 **Technical data D2T servo drive**

HIWIN D2T servo drive amplifier				D2T-0123	D2T-0423	D2T-1023
Power supply		**Final stage supply voltage and frequency**		200 to 240 VAC (± 10 %) / 50 to 60 Hz (± 5 %)		
		Number of phases		1 or 3		
		Power consumption of final stage		1.5 A_{eff}	4.1 A_{eff}	7.5 A_{eff}
		Logic supply voltage and frequency		200 to 240 VAC (± 10 %) / 50 to 60 Hz (± 5 %) 1-phase only		
		Power consumption of logic supply		0.5 A max.		
Output current		**Continuous current (effective)**		0.9 A	2.5 A	5.1 A
		Peak current (effective)		2.7 A	7.5 A	15.3 A
		Maximum duration of peak current		1 second		
Type of control				IGBT PWM vector control		
Controller sampling rate				Current, speed and position controllers: 15 kHz: standard or mega-ulink 16 kHz: EtherCAT (CoE)		
Motor types supported				AC servo motors		
Status LED				Red: Error; Green: Ready		
Operating modes	**Position control**	**Inputs/outputs**		Low-speed pulse inputs (CN6 pins: 3, 4, 5, 6) High-speed pulse inputs (CN6 pins: 44, 45, 46, 47)		
		Function		Step/direction; CW/CCW; AB signals (4× evaluation)		
		Maximum input frequency		Low-speed (optocoupler): 500 kHz High-speed (differential): 4 MHz		
		Electric gear		Ratio: pulses/counts: pulses: 1 – 2,147,483,647 counts: 1 – 2,147,483,647		
	Speed/torque control	**Analogue**	**Input resistance**	10 kΩ		
			Input voltage	±10 VDC		
			Resolution	12 Bit		
		Digital	**PWM**	Via low-speed pulse inputs		
			Frequency	Min. 36.5 kHz; max. 100 kHz		
			Min. pulse duration	220 ns		
Encoder interface		**Operating voltage**		+ 5 VDC ± 5 % at 400 mA		
		Input	**Signal type**	A, /A, B, /B, Z, /Z, differential signals		
			Bandwidth	After 4× evaluation 5 million inc/s		
			Option	Dual loop with rotatory 17-bit absolute encoder and AqB linear encoder (not for D2T-xxxx-E-)		
		Output	**Signal type**	A, /A, B, /B, Z, /Z, differential TTL		
			Resolution	After 4× evaluation 8 million inc/s		
Encoder simulation output				Max. 18 million inc/s, RS422 differential; adjustable scaling		
Communication		**Interface**		USB 2.0		

Table 4.13 **Technical data D2T servo drive (continued)**

HIWIN D2T servo drive amplifier		D2T-0123	D2T-0423	D2T-1023
Parametrisable I/O interface	**Digital inputs**	[I1 to I10], (single-end, optocoupler), 12–24 VDC		
	Digital outputs	[O1 to O5], (optocoupler), 24 VDC, 100 mA		
	Analogue outputs	2 (1 × speed, 1 × torque)		
	Brake output	BRAKE [CN2_BRK], max. 1 ADC		
Feedback	**Resistance**	External		
	Activation threshold	+ HV > 370 VDC		
	Deactivation threshold	+ HV < 360 VDC		
	Tolerance	< 5 %		
Monitoring functions		Short circuit, overvoltage (> 390 VDC ± 5 %), undervoltage (< 60 VDC); position error, encoder error, motor phase monitoring, overtemperature D2T (IGBT >90 °C ±1 °C), motor overtemperature		
Autotuning		With automatic mass inertia calculation		
Error mapping	**Method**	Compensation table for correcting position errors through linear interpolation		
	Table entries	Max. 5,000		
	Activation	Following successful referencing or via digital input signal		
VSF (vibration suppression)		0.1 Hz to 200 Hz		
Other functions		Friction compensation, gear play compensation		
External EtherCAT adapter (option)		EtherCAT with mega-ulink protocol		
Ambient conditions	**Operating temperature**	0 to 40 °C (above 55 °C only with air conditioning)		
	Storage temperature	–20 °C to +65 °C		
	Air humidity	0 to 90 % (non-condensing and frost free)		
	Operating altitude	< 1,000 m above sea level		
	Vibration	10 m/s² (10 to 500 Hz)		
	Protection class	IP20		

5. Transport and installation

5.1 Delivery

5.1.1 Delivery state

The KK linear axes are supplied fully assembled, function tested and ready for connection.

5.1.2 Scope of delivery

The scope of supply may vary depending on the configuration ordered. Please note the contractual documentation.

5.2 Transport to the installation site

For weights of 25 kg or over, suitable hoists of a corresponding size must be used for transportation. Observe the applicable occupational health and safety regulations when handling suspended loads.

⚠ DANGER!

Danger from electrical voltage!
Before and during assembly, disassembly and repair work, dangerous currents may flow.
- Work may only be carried out by a qualified electrician and with the power supply disconnected!
- Before carrying out work on the linear axis system, disconnect the power supply and protect it from being switched back on!

⚠ WARNING!

Risk of burns!
The motor heats up during operation and thus touching the motor can lead to burns.
- Provide protective devices and warning notices at the motor!

ATTENTION!

Risk of material damage!
The KK linear axis may be damaged by mechanical loading.
- Hoist the KK linear axis only by its profile, and not by the motor or spindle!
- For longer linear axes, provide additional protection of the centre section!
- Ensure that the linear axis does not bend as this could permanently damage accuracy!
- During transport, do not transport any additional loads on the linear axis!
- Before transport, secure the linear axis and components against tilting!

NOTE

KK linear axes should always be operated together with appropriate protective equipment (zero-contact or mechanical); this protective equipment must be designed, installed and regularly checked in accordance with applicable national and international legislation and specifications.

5.3 Requirements at the installation site

5.3.1 Ambient conditions

Ambient temperature	+5 °C to +40 °C
Installation site	flat, dry, vibration-free
Atmosphere	not corrosive, not explosive
Evenness	0.03 mm over 300 mm

5.3.2 Safety equipment to be provided by the operator

Possible safety equipment/measures:

- Personal protective equipment in accordance with UVV (German accident prevention regulations)
- Zero-contact protective equipment
- Mechanical protective equipment

5.4 Storage

- Store the KK linear axes in their transport packaging.
- Only store the KK linear axes in dry, frost-free areas with a corrosion-free atmosphere.
- Clean and protect used KK linear axes before storage.

5.5 Unpacking and installing

NOTE

The KK linear axis may only be installed and operated indoors.

NOTE

The KK linear axes present the ideal design for horizontal installations. When installed, the linear axes must not exceed an angle of 1° on the X and Y-axes.

- Remove protective film.
- Carefully transport KK linear axis to the designated installation site.
- Ensure that the maintenance points are easily accessible.
- Dispose of packaging in an environmentally friendly way.

5.6 Storage of motor and servo drive

⚠ DANGER!

Danger from electrical voltage!
If motors are incorrectly earthed, there is a danger of electric shock.
- Before connecting the electrical power supply, ensure that the linear axis system is correctly earthed via the PE rail in the switch cabinet!

⚠ DANGER!

Danger from electrical voltage!
Electrical currents may flow even if the motor is not moving.
- Ensure that the linear axis system is disconnected from the power supply before the electrical connections are detached from the motors!
- After disconnecting the drive amplifier from the power supply, wait at least 5 minutes before touching live parts or breaking connections!
- For safety reasons, measure the voltage in the intermediate circuit and wait until it has fallen below 40 V!

- The drives are delivered in packaging. If the drives are to be put into storage, they must be kept in this packaging. They must be stored in a dry location with protection from impact.

5.7 Further informations

If you have any questions, please contact our Sales:

Phone +49 (0) 781 / 9 32 78-0
Fax: +49 (0) 781 / 9 32 78-90
E-mail: support@hiwin.de

If you have questions, suggestions or corrections concerning the documentation, please send us a fax to the following number:
Fax: +49 (0) 781 / 9 32 78-90

6. Assembly and connection

⚠ DANGER!

Danger from electrical voltage!
Before and during assembly, disassembly and repair work, dangerous currents may flow.
- Work may only be carried out by a qualified electrician and with the power supply disconnected!
- Before carrying out work on the linear axis system, disconnect the power supply and protect it from being switched back on!

⚠ WARNING!

Risk of crushing from carriages!
Danger of injury from crushing and damage to the linear axis caused by movement of the carriage due to gravity, as it does not feature brakes in its standard version.
- Ensure that the KK linear axis does not exceed 1° horizontal deviation on the X and Y-axes during installation!

⚠ WARNING!

Danger from suspended loads or falling parts!
Lifting heavy loads may damage your health.
- Use a hoist of an appropriate size when positioning heavy loads!
- Observe applicable occupational health and safety regulations when handling suspended loads!
- Hoist the linear axis only by its profile!

NOTE **The mounting surface must have an evenness of 0.03 mm over 300 mm.**

NOTE **The KK linear axes may only be assembled by specialist personnel.**

6.1 Assembly of the KK linear axis

ATTENTION!

Risk of material damage!
The linear axis KK has no brake as standard!
- When used in vertical applications, prevent unintentional lowering of the linear axis!

The KK linear axes are designed as standard for horizontal installations. Optionally, the motors can be delivered with a brake that prevents the drive from dropping in the unenergised state!
Vertical installations must always comply with the affected safety guidelines.

The linear axes are secured exclusively from above. Drilled holes are available for cylindric head screws. The number of holes depend on the length of the carrying profile.
- Produce appropriate mounting holes on the mounting surface if not already present
- Clean mounting surface and position KK linear axis on it
- Set the KK linear axis firmly against the reference edge (Fig. 6.1)
- Screw the mounting bolts in all mounting holes, proceeding from inside to outside in a spiral sequence

✓ KK linear axis is mounted

NOTE **Lock screws against unwanted loosening!**

Table 6.1 **Tightening torques for mounting bolts**

Series/size	Screw size	Tightening torque [Nm]
KK30	M3	1.8
KK40	M3	1.8
KK50	M4	4.4
KK60	M5	7.2
KK86	M6	10.2
KK100	M8	18.6
KK130	M8	18.6

6.2 Assembly of a moved load

⚠ WARNING!

Danger from suspended loads or falling parts!
Lifting heavy loads may damage your health.
- Use a hoist of an appropriate size when positioning heavy loads!
- Observe applicable occupational health and safety regulations when handling suspended loads!

- Clean the mounting surfaces for the loads on the KK linear axis
- Clean the mounting surface of the load
- Position the load on the KK linear axis
- Tighten the mounting bolts, proceeding in a spiral fashion
- Check the free movement of the load over the entire travel distance
- Lock the bolts

✓ The load is now mounted on the KK linear axis

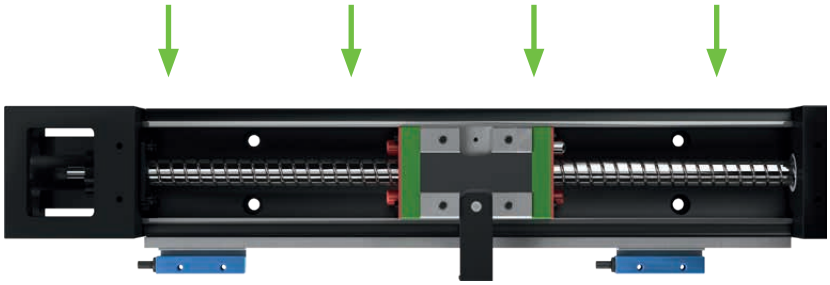

Fig. 6.1 **Reference edge**

6.3 Electrical connection

⚠ DANGER!

Danger from electrical voltage!
If motors are incorrectly earthed, there is a danger of electric shock.
- Before connecting the electrical power supply, ensure that the linear axis system is correctly earthed via the PE rail in the switch cabinet!

⚠ DANGER!

Danger from electrical voltage!
Electrical currents may flow even if the motor is not moving.
- Ensure that the linear axis system is disconnected from the power supply before the electrical connections are detached from the motors!
- After disconnecting the drive amplifier from the power supply, wait at least 5 minutes before touching live parts or breaking connections!
- For safety reasons, measure the voltage in the intermediate circuit and wait until it has fallen below 40 V!

NOTE

Please observe the separate installation and startup instructions for the drive amplifier

The KK linear axes are fully wired on delivery. All the connections needed are established via three connectors on the linear axis.

The limit switches for the KK linear axes are delivered with open cable ends. The motor and encoder cables are cast in the motor and fitted with a plug for fast connections to the motor and encoder extension cables. Fig. 6.2 shows the basic structure.

Table 6.2 **Connection overview**

Number	Connection	Name
1		Power switch
2		Mains filter (optional)
3		Motor power switch
4		Mains choke
5	CN1: L1, L2, L3, PE	Main energy supply
6	CN1: U, V, W, PE	Motor current supply
7	CN1: REG+, REG–, PE	Brake resistor
8	CN1: L1C, L2C	Logic supply
9	CN2	Brake
10	CN3	Mini USB communication connection (for setting parameters and configuring)
11	CN6	Control I/O and encoder output
12	CN7	Motor encoder input
		EtherCAT option

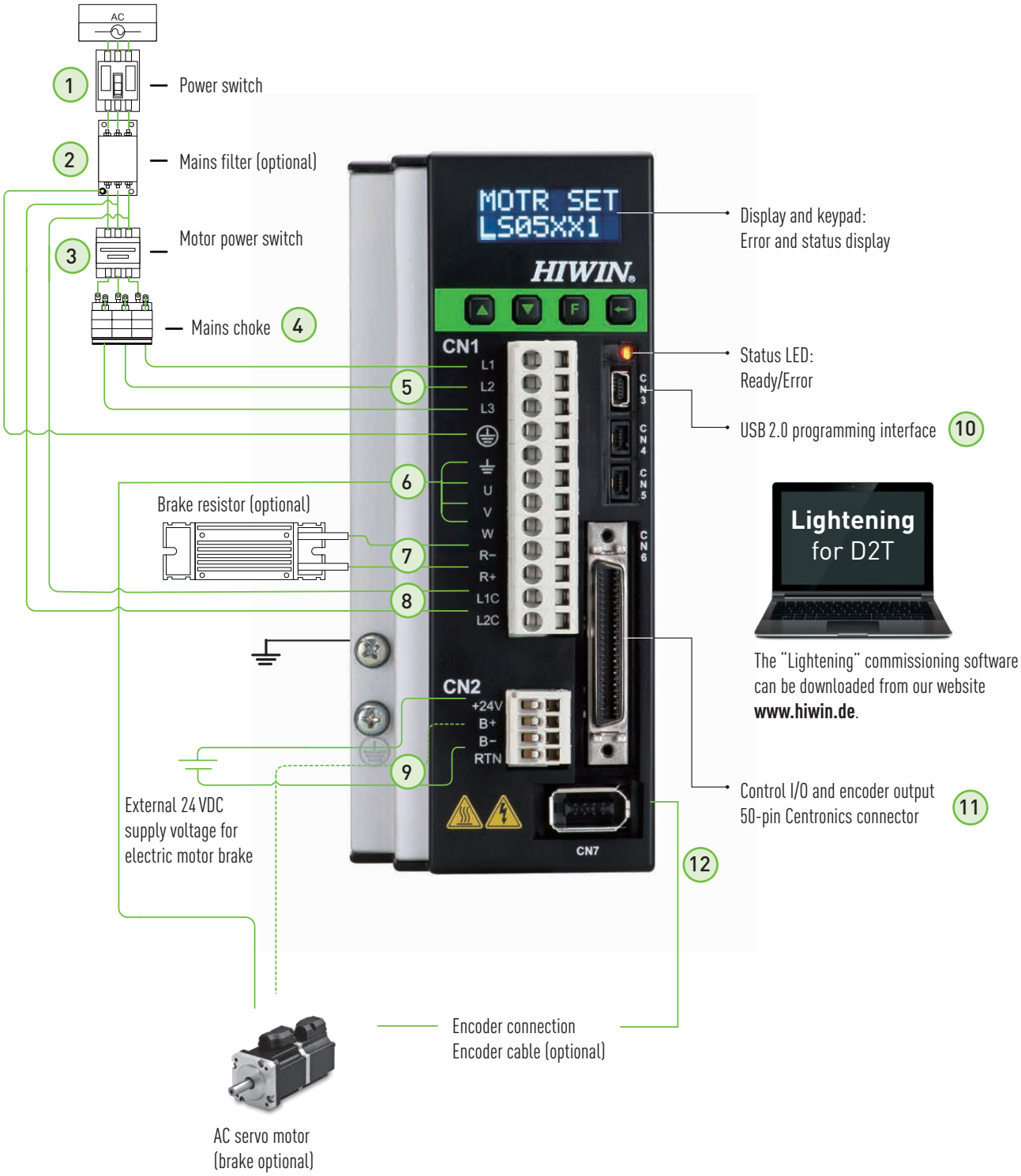

Fig. 6.2 **Overview of electrical connections**

6.4 Motor connection

NOTE

The servo motors are designed for a max. intermediate circuit voltage of 320 VDC. They are therefore suitable for drives with a max. supply voltage of 240 VDC.

NOTE

The maximum length of the supply cable is 15 m.
For longer cables, suitable filters must be fitted to prevent voltage peaks.

Servo motor properties:

- Brushless three-phase synchronous motors
- Connection via motor connector
- Motor connector (power connector) up to max. 500 VAC/DC

6.4.1 Motor connector for 50 W – 750 W motors

Table 6.3 **Assignment of motor connector for 50 W – 750 W motors**

Signal	AMP-172167-1 (without brake)	AMP-172168-1 (with brake)
U	3	3
V	2	2
W	1	1
GND	4	4
B	–	5
B	–	6

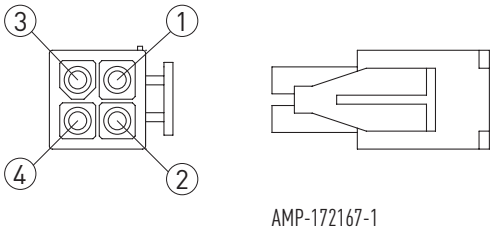

Fig. 6.3 **Connector assignment without brake, motor connector for 50 W – 750 W motors**

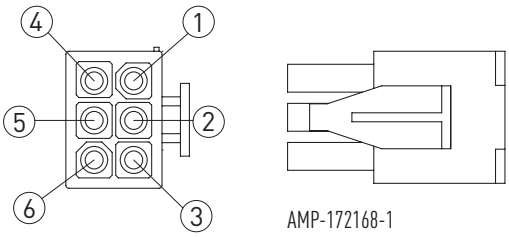

Fig. 6.4 **Connector assignment with brake, motor connector for 50 W – 750 W motors**

6.4.2 Motor connector, 1,000 W and above

Motors of 1,000 W and above with a motor brake have an additional, separate brake connector (see Fig. 6.6)

Table 6.4 **Motor connector assignment, sizes from 1,000 W**

Signal	WPS3102A18-10P-R	WPS3102A14S-7P-R
U	A	–
V	B	–
W	C	–
GND	D	–
B	–	A
B	–	C

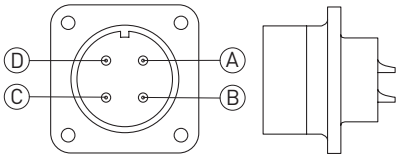

WPS3102A18-10P-R

Fig. 6.5 **Assignment of motor connector, 1,000 W and above**

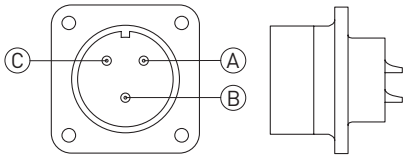

WPS3102A14S-7P-R

Fig. 6.6 **Connector assignment for brake, 1,000 W and above**

6.4.3 Encoder connector for 50 W – 750 W motors

Table 6.5 **Assignment of encoder connector, 50 W – 750 W**

Function	17 bit absolute (singleturn)	17 bit absolute (multiturn)	AMP-172169-9
Power supply	5 V ± 5 %		1
	0 V		2
Data	SC+	–	3
	SC–	–	4
	–	VB (battery)	5
	–	GND (battery)	6
	MA+	SD+	7
	MA–	SD–	8
Shielding	Shielding		9

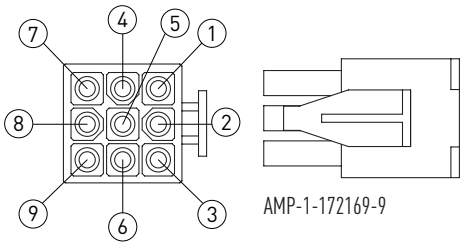

Fig. 6.7 **Encoder connector, 50 W – 750 W**

6.4.4 Encoder connector, 1,000 W and above

Table 6.6 **Assignment of encoder connector, 1,000 W and above**

Function	17 bit absolute (singleturn)	17 bit absolute (multiturn)	WPS3102A18-1P-R
Power supply	5 V ± 5 %		A
	0 V		B
Data	SC+	–	C
	SC–	–	D
	–	VB (battery)	E
	–	GND (battery)	F
	MA+	SD+	G
	MA–	SD–	H
Shielding	Shielding		I

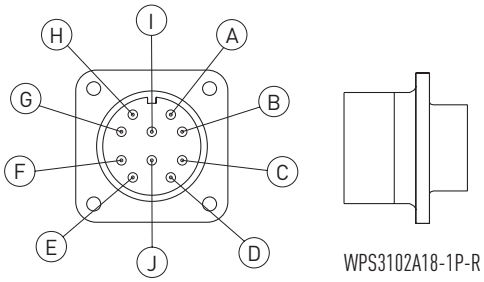

Fig. 6.8 **Encoder connector, 1,000 W and above**

6.5 Limit switch connection

- Two optical or inductive proximity switches in PNP design as limit switches are installed ready for operation in the linear axis.
- Connection via a 9-pin Sub-D connector

6.5.1 PIN assignment of the inductive limit switches

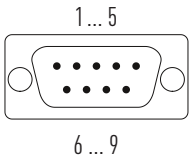

Fig. 6.9 **PIN assignment of limit switch connector**

Table 6.7 **PIN assignment of the inductive limit switches**

Limit switch cable	PIN No.	Colour of limit switch cable	Signal
	1	White (positive)	2 – A\
Blue	2	Blue	GND – 0 V
Switch 3 black	3	Green (reference)	3 – A\
	4	Yellow	
	5	Grey	
Brown	6	Brown	+ 24 VDC
Switch 1 black	7	Pink (negative)	1 – A\
	8	Red	
	9	Black	

6.6 Power supply – typical values

The minimum cross-section of the mains connection cable depends on:

- Local requirements (see VDE 0100 part 523 and VDE 0298 part 4)
- Ambient temperature
- Required rated current of the converter

Table 6.8 **Typical values for the power supply**

Amplifier rated current [A]	PIN No. connected load [kVA]	Max cable cross section of the clamps [mm²]	Signal Recommended fuse (gL) [A]
0.9	0.5	2.5	1 × 10
3.2	1.5	2.5	1 × 10
5.1	2.3	2.5	1 × 16

6.7 Parking brake connection

See here Table 6.3 and Table 6.4.

6.8 Assembly of aluminium cover

- Screw the block adapter **[1]** onto the block **[2]** with a tightening torque from Table 6.9.
- Screw the aluminium cover **[3]** with the drive flange **[4]** and the end plate **[5]**.

✓ Aluminium cover is mounted.

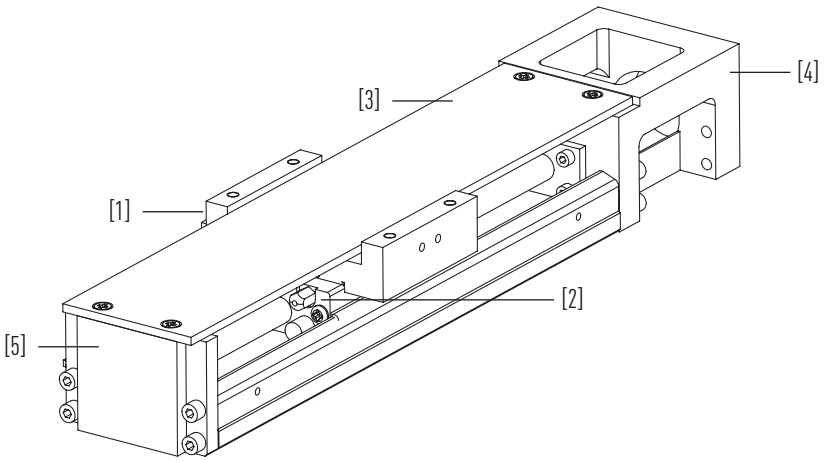

Fig. 6.10 **KK axis with aluminium cover plate**

Table 6.9 **Tightening torques for mounting bolts**

Thread	M3	M4	M5	M6	M8	M10
Tightening torque [Nm]	1.2	2.9	6.0	12.2	24.9	49.4

6.9 Assembly of bellow cover

- Screw the block adapter **[1]** onto the block **[2]** with a tightening torque from Table 6.9.
- Screw the bellow cover **[3]** with the drive flange **[4]**, the end plate **[5]** and the block adapter.

✓ Bellow cover is mounted.

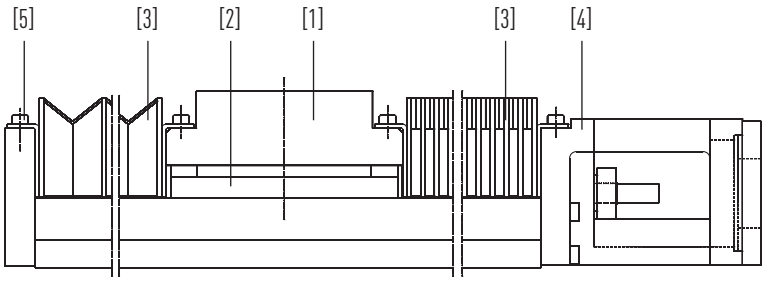

Fig. 6.11 **KK axis with bellow cover**

6.10 Assembly of cross table adapter

- Connect the cross table adapter **[2]** with the screws **[6]** to the lower KK axis **[1]** as shown in Fig. 6.12. Tighten the screws with the torque from Table 6.9.
- Screw the upper KK axis **[3]** to the cross table adapter **[2]** as shown in Fig. 6.12, but only slightly apply the screws **[4]**.
- To align the upper KK axis **[3]** with the two threaded pins **[5]**, firmly attach the KK axle to the reference edge.
- Then fully tighten the screws **[4]** of the upper KK axis **[3]**.

✓ Cross table with cross table adapter is mounted.

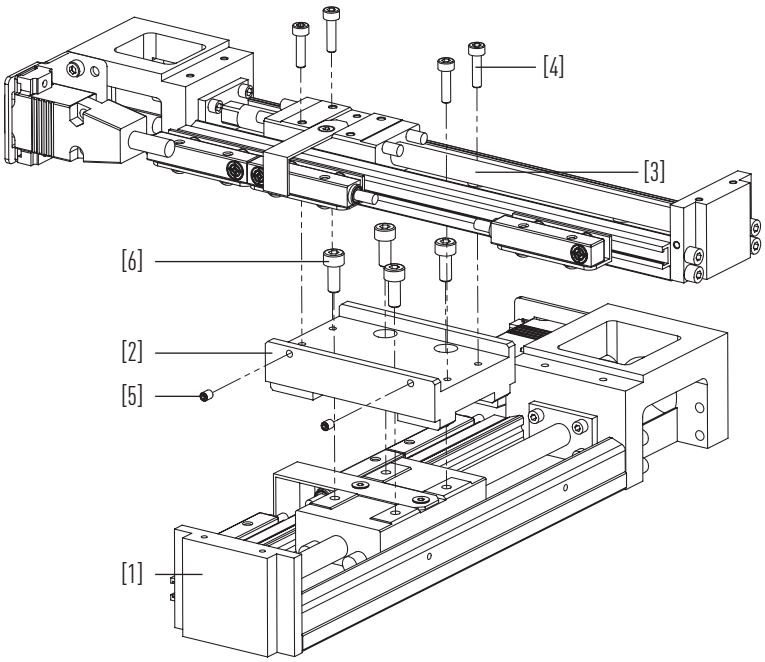

Fig. 6.12 **Exploded view of cross table**

Table 6.10 **Article numbers of cross table adapter**

	Cross table adapter set	Pos. 1 (1 piece)	Pos. 2 (1 piece)	Pos. 3 (1 piece)	Pos. 4 (4 pieces)	Pos. 5 (2 pieces)	Pos. 6 (4 pieces)
Without aluminium cover	10-000604	KK40	10-000568	KK40	20-000188	20-000475	20-000185
	10-000606	KK50	10-000573	KK40	20-000188	20-000475	20-000191
	10-000608	KK50	10-000570	KK50	20-000192	20-000475	20-000191
	10-000610	KK60	10-000574	KK50	20-000192	20-000475	20-000084
	10-000612	KK60	10-000571	KK60	20-000084	20-000475	20-000084
	10-000614	KK86	10-000575	KK60	20-000084	20-000475	20-000478
	10-000616	KK86	10-000572	KK86	20-000095	20-000476	20-000478
With aluminium cover	10-000605	KK40	10-000569	KK40	20-000188	20-000475	20-000477
	10-000607	KK50	10-000579	KK40	20-000187	20-000475	20-000192
	10-000609	KK50	10-000576	KK50	20-000191	20-000475	20-000192
	10-000611	KK60	10-000580	KK50	20-000192	20-000475	20-000085
	10-000613	KK60	10-000577	KK60	20-000084	20-000475	20-000085
	10-000615	KK86	10-000581	KK60	20-000084	20-000475	20-000478
	10-000617	KK86	10-000578	KK86	20-000478	20-000476	20-000478

7. Commissioning

7.1 Switching on the linear axis system

⚠ WARNING!

Danger of crushing!
The movement of the carriage at the end positions of the machine can cause crushing of limbs.
▶ Provide protective equipment to prevent people from reaching into the danger area of the machine!

⚠ WARNING!

Risk of burns!
The motor heats up during operation and thus touching the motor can lead to burns.
▶ Provide protective devices and warning notices at the motor!

ATTENTION!

Risk of material damage!
Danger of material damage through uncontrolled movements of the carriage in the case of a power cut.
▶ Make sure that suitable end stops are fitted at the end positions of the linear axis!

NOTE

Linear axes should always be operated together with appropriate protective equipment (zero-contact or mechanical); this protective equipment must be designed, installed and regularly checked in accordance with applicable national and international legislation and specifications.

7.2 Programming

NOTE

**The programming of the linear axis system depends on the controller and drive amplifier used.
Observe the assembly instructions for the controller and drive amplifier!**

8. Maintenance and cleaning

⚠ WARNING!

Unauthorised repairs on the system
Unauthorised work on the system creates the risk of injuries and may invalidate the warranty.
- The system must only be serviced by specialist personnel!

Use only suitable, non-hazardous agents. Please observe the manufacturer's safety data sheets. **NOTE**

During maintenance:
- Secure the linear axis system against being switched back on without authorisation.
- Disconnect the power supply of the linear axis system.
- Secure the linear axis system against being switched back on without authorisation.

8.1 Linear guideway and shaft

8.1.1 Lubrication

As with rolling bearings, the linear axis profile rails require a sufficient supply of lubricant. This lubrication reduces wear, protects against dirt and deposits, prevents corrosion and extends service life.
Observe the instructions of the lubricant manufacturer!
Check the miscibility of various lubricants. Lubricants of the same classification (e.g. CL) and similar viscosity (maximum difference of 1 class) are miscible.
Greases are miscible when their base oil and thickening types are the same. The viscosity of the base oil must be similar and the NGLI class may be different by a maximum of one grade.

Ensure that old grease, dirt and chippings are removed from the profile rails before lubrication! **NOTE**

Only use lubricants that are in accordance with DIN 51825, KP2K of the consistency class NGLI2! **NOTE**

Ensure that only lubricants without solid lubricant particles (e.g. graphite or MoS_2) are used! **NOTE**

Table 8.1 **Miscibility of HIWIN greases**

	G01	G02	G03	G04	G05
G01	●	●	●	○	○
G02	●	●	●	●	●
G03	●	●	●	●	●
G04	○	●	●	●	●
G05	○	●	●	●	●

Table 8.2 **Compatibility of preserved products with HIWIN greases**

	G01	G02	G03	G04	G05
KK	○	●	●	●	●

● miscible
○ partly miscible

Recommendation:
In the case of lubricants that can be mixed only to a limited degree, the old grease should first be consumed as much as possible before new grease is introduced. The relubrication quantity for the new grease should be increased for a short time. In the case of lubricants that cannot be mixed, the old grease should first be removed completely before new grease is introduced.

Table 8.3 **Nipples for grease lubrication**

Art. No.: 20-000275 – M3 × 0.5 P KK40	**Art. No.: 20-000272 – M4 × 0.7 P** KK50, KK60, KK86	**Art. No.: 20-000273 – M6 × 0.75 P** KK100, KK130

For linear axes with aluminium cover:
▶ Move the carriage to the limit stop.
✓ Grease nipple can now be accessed.

For linear axes with bellow cover:
▶ Detach the bellows from the carriage.
✓ Grease nipple can now be accessed.

NOTE

On the KK linear axes, the spindle and rail are lubricated through the same grease nipple!

Under normal operating conditions, the linear guideways and the ballscrew must be relubricated.
Before lubrication, the linear axis must be checked for soiling and, if necessary, cleaned.

NOTE

For the linear axes KK30 we recommend the use of a suitable spray-on grease (e.g. Fuchs Planto Multispray S). Apply the lubricant evenly over the entire length on the ball track and on the ballscrew. Then move the block over the entire stroke and remove excess grease.

Table 8.4 **Lubricant quantities**

Model	Ballscrew	Lubricant quantity per block [g]	Travel distance [km]
KK30	6 × 1	0.45	250
KK40	8 × 1	0.50	250
KK50	8 × 2	0.55	300
KK60	12 × 5	0.70	300
KK60	12 × 10	0.75	600
KK86	15 × 10	2.50	600
KK86	15 × 20	3.00	800
KK100	20 × 20	4.50	1,000
KK130	25 × 25	10.00	1,000

The lubricant quantity for nondriven blocks must be reduced to about 75 % of the specified values.
At the ends of the blocks, the linear axes are fitted as standard with grease nipples that can be charged with standard grease guns. Optional lubrication adapters are available that connect the linear axes directly to the central lubrication system's lubrication line.
When lubricating, make sure that the block is moved during the process to its end positions. This ensures adequate lubrication over the whole linear axis.
Relubrication intervals every 200–600 operating hours or travel distance according to the above table for loads ≤ 0.10 C_{dyn}.
For vertical installation, the relubricant quantity is increased by approx. 50 %.
Under special operating conditions (soiling, short stroke, installation type), the lubrication intervals must be adjusted from case to case.

NOTE

For linear axes with bellows, the grease nipples can be accessed only when the bellows are detached from the carriage.

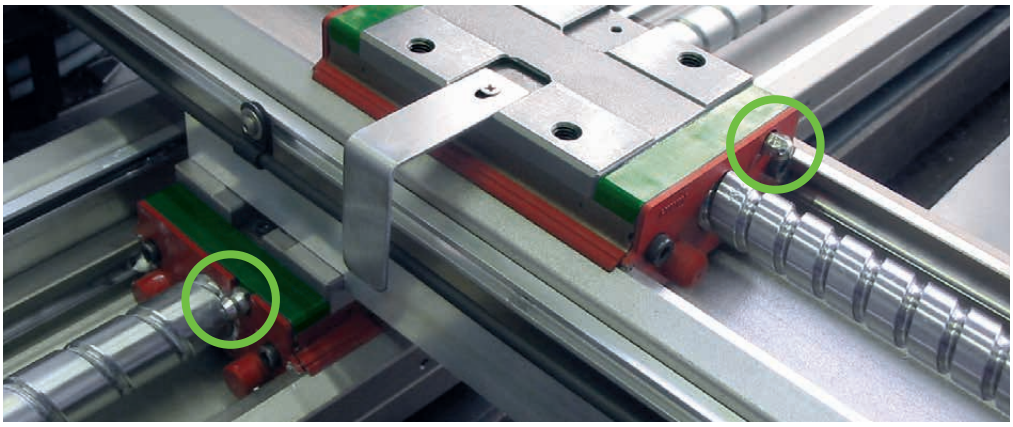

Fig. 8.1 **Arrangement of grease nipples on the ends of the block (example)**

8.1.2 Cleaning

Dirt can settle and accumulate over time on unprotected profile rails. Profile rails must therefore be regularly checked for dirt and cleaned if necessary.

8.2 Electromagnetic components

The energy chain and the cable have a limited lifetime. For example, the energy chain is specified for 4 million cycles. However, the lifetime cannot be calculated exactly due to ambient conditions and drive performance.
The following components should therefore be regularly checked for wear and correct position, and should be replaced if necessary (wearing parts are not covered by the warranty):

- Cable in the energy chain (e.g. signs of abrasion on the cable insulation)
- Cable connections
- Distance between the cam switch and sensors (common cause of malfunction of the limit/reference switch)

NOTE

In critical production situations, make sure that there is a stock of wearing parts!

9. Faults

9.1 Faults with the motor

Table 9.1 **Fault table**

Fault	Possible cause	Remedy
Motor does not start	Supply lines disconnected	Check connections, remedy defects if necessary.
	Fuse has tripped via motor protection	Check motor protection for the right settings, remedy defects if necessary
Motor turns in the wrong direction	Motor phase connected incorrectly	Check drive amplifier, check nominal value
Motor hums and has a high current consumption	Rotor is jammed	Check motor
	Brake jammed	Check power supply
	Fault in encoder cable	Check encoder cable
Motor heats up too much (measure temperature)	Overload	Carry out power measurement, if necessary use a larger motor or reduce load
	Cooling insufficient	Rectify cooling air supply or open cooling air passages, retrofit external fan if necessary
	Ambient temperature too high	Observe permissible temperature range
	Rated duty cycle exceeded, e.g. duty cycle too long	Adjust motor's rated duty cycle to the necessary operating conditions
Operating noise from the bearing	Relubrication otherwise risk of bearing damage	Consultation with HIWIN GmbH customer service

9.2 Faults during operation with drive amplifier

The faults described in chapter 9.1 "Faults with the motor" can also occur while operating the motor with a drive amplifier. For interpretation of faults and information on how to remedy them, see the drive amplifier manufacturer's installation instructions.

10. Disassembly

⚠ DANGER!

Danger from electrical voltage!
Before and during assembly, disassembly and repair work, dangerous currents may flow.
- Work may only be carried out by a qualified electrician and with the power supply disconnected!
- Before carrying out work on the linear axis system, disconnect the power supply and protect it from being switched back on!

⚠ WARNING!

Risk of crushing from carriages!
Danger of injury from crushing and damage to the linear axis caused by movement of the carriage due to gravity, as it does not feature brakes in its standard version.
- Ensure that the KK linear axis does not exceed 1° horizontal deviation on the X and Y-axes during installation!

⚠ WARNING!

Danger from suspended loads or falling parts!
Lifting heavy loads may damage your health.
- Use a hoist of an appropriate size when positioning heavy loads!
- Observe applicable occupational health and safety regulations when handling suspended loads!
- Hoist the linear axis only by its profile!

Disassembly steps:
- Disconnect the axis from the electricity supply.
- Unscrew and remove the moved loads.
- Unscrew and remove the KK linear axis.

✓ The KK linear axis has now been disassembled.

11. Disposal

ATTENTION!

Danger caused by environmentally hazardous substances!
The danger to the environment depends on the type of substance used.
- Clean contaminated parts thoroughly before disposal!
- Clarify the requirements for safe disposal with disposal companies and, where appropriate, with the competent authorities!

Table 11.1 **Disposal**

Fluids	
Lubricants	dispose of as hazardous waste in an environmentally friendly way
Soiled cleaning cloths	dispose of as hazardous waste in an environmentally friendly way
Linear axis system	
Cabling, electrical components	dispose of as electrical waste
PP components (e.g. energy chain)	dispose of separately
Steel components (e.g. profile rail)	dispose of separately
Aluminium components (e.g. profile)	dispose of separately

12. Appendix 1: Order code of linear axes KK

KK	60	10	P	300	A	2	F0

KK linear axis

Model:
30, 40, 50, 60, 86, 100, 130

Lead [mm]:
KK30: 01
KK40: 01
KK50: 02
KK60: 05, 10
KK86: 10, 20
KK100: 20
KK130: 25

Accuracy class:
C[1], P

Flange type:
F0, F1, F2, F3

Number of blocks:
1
2

Block type:
A: Standard
S: Short (KK60, KK86)[1]

Length of profile rail[2] [mm]:
KK30: 75, 100, 125, 150, 175, 200
KK40: 100, 150, 200
KK50: 150, 200, 250, 300
KK60: 150, 200, 300, 400, 500, 600
KK86: 340, 440, 540, 640, 740, 940
KK100: 980, 1,080, 1,180, 1,280, 1,380
KK130: 980, 1,180, 1,380, 1,680

Continuation order code for KK linear axes

C	SA	M	05	B	4	1	E

Cover:
0: Without
B: Bellow cover (KK60, KK86)
C: Aluminium cover

Limit switches[5]:
0: None
S0: Only sensor rail
SA: One limit switch on sensor rail
SB: Two limit switches on sensor rail, from length 150
SC: Three limit switches on sensor rail, from length 200

Motor[5]:
0: None
M: With Motor

Model:
None: Standard
E: Customer specific

Cable output[3][4]:
1: Cable output position 1
2: Cable output position 2
3: Cable output position 3
4: Cable output position 4

Encoder:
4: 17 bit absolute (multiturn)
6: 17 bit absolute (singleturn)

Motor brake[3]:
0: None
B: With motor brake

Performance[3]:
00: Special motor
05: HIWIN FRLS05 50 W
10: HIWIN FRLS10 100 W
20: HIWIN FRLS20 200 W
40: HIWIN FRMS40 400 W
75: HIWIN FRMS75 750 W
1K: HIWIN FRMM1K 1,000 W

[1] On request
[2] Shortened lengths are available on request
[3] Does not apply to models without motor
[4] See Fig. 12.1
[1] Not available for model KK30

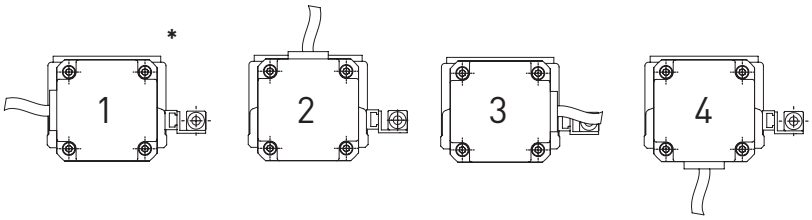

* Standard cable outlet if not specified otherwise.

Fig. 12.1 **Position of cable output**

13. Appendix 2: Technical data

13.1 KK linear axes

13.1.1 KK30 linear axes without cover

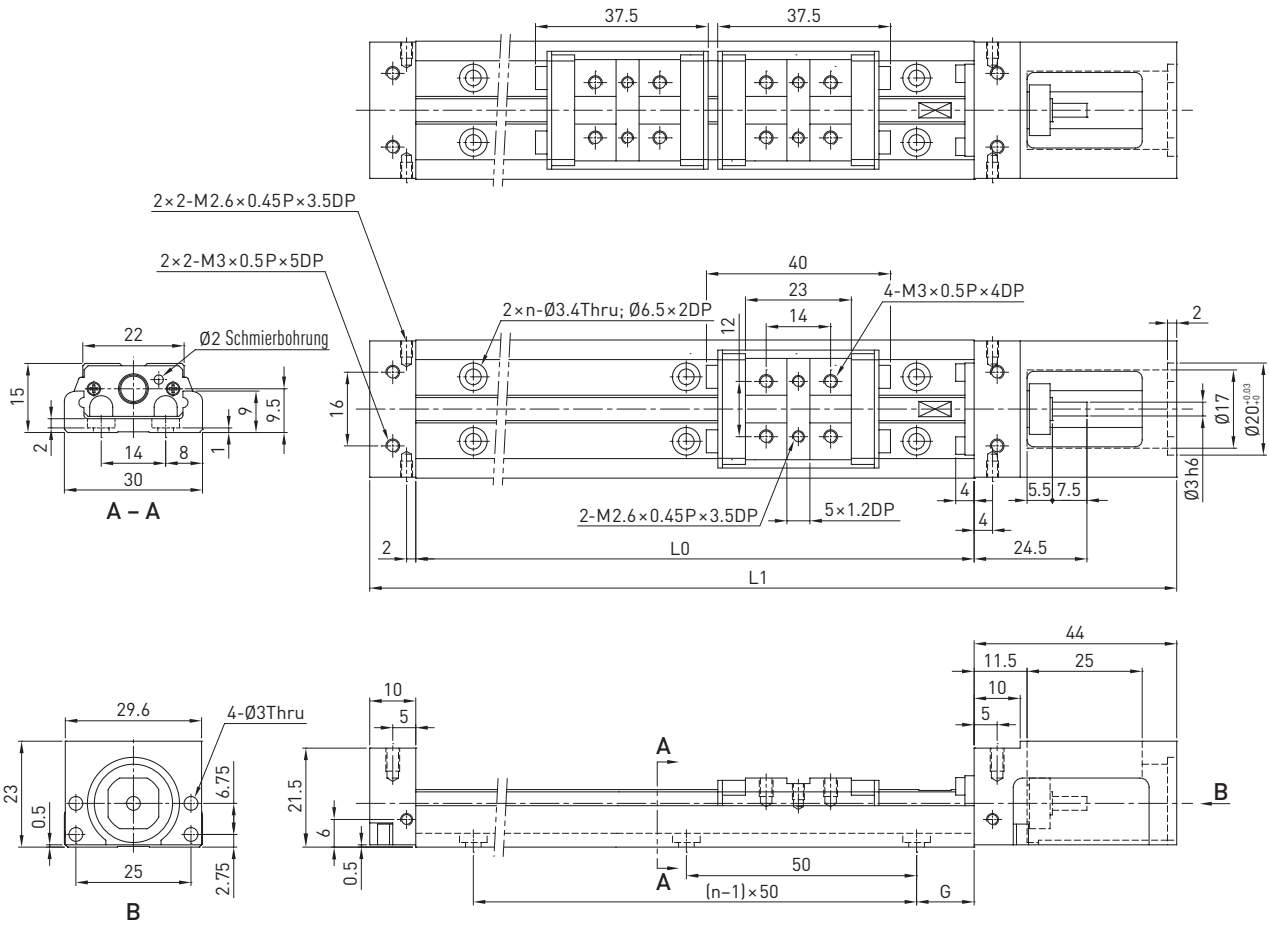

Table 13.1 **Dimensions and weights of KK30 linear axes without cover**

Model	Lead [mm]	L0 [mm]	L1 [mm]	Maximum stroke [mm]		G [mm]	n	Weight [kg]	
				Block A1	Block A2			Block A1	Block A2
KK3001P0075	1	75	129	31	—	12.5	2	0.20	—
KK3001P0100	1	100	154	56	—	25.0	2	0.23	—
KK3001P0125	1	125	179	81	45	12.5	3	0.26	0.30
KK3001P0150	1	150	204	106	70	25.0	3	0.29	0.33
KK3001P0175	1	175	229	131	95	12.5	4	0.32	0.36
KK3001P0200	1	200	254	156	120	25.0	4	0.35	0.39

Reference edge
Viewed from the motor flange, the reference edge is located on the left side of the linear axis.

13.1.2 KK30 linear axes with aluminium cover

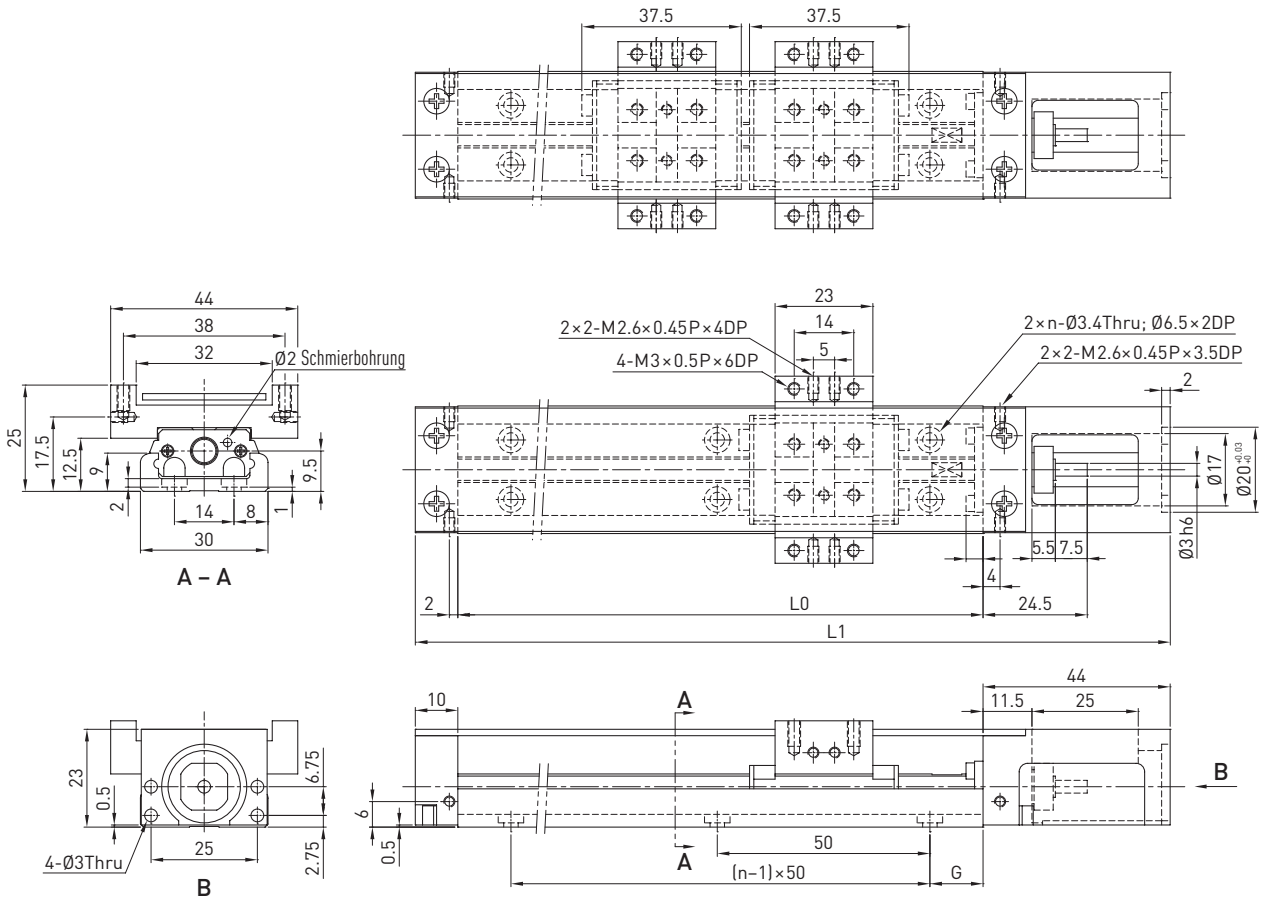

Table 13.2 **Dimensions and weights of KK30 linear axes with aluminium cover**

Model	Lead [mm]	L0 [mm]	L1 [mm]	Maximum stroke [mm]		G [mm]	n	Weight [kg]	
				Block A1	Block A2			Block A1	Block A2
KK3001P0075	1	75	129	31	—	12.5	2	0.24	—
KK3001P0100	1	100	154	56	—	25.0	2	0.27	—
KK3001P0125	1	125	179	81	45	12.5	3	0.30	0.36
KK3001P0150	1	150	204	106	70	25.0	3	0.33	0.39
KK3001P0175	1	175	229	131	95	12.5	4	0.37	0.43
KK3001P0200	1	200	254	156	120	25.0	4	0.40	0.46

Reference edge
Viewed from the motor flange, the reference edge is located on the left side of the linear axis.

13.1.3 KK30 adapter flanges

Motor adapter flange F0

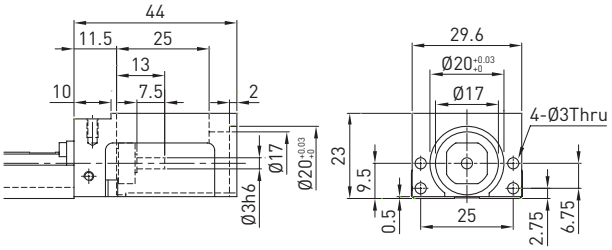

Motor adapter flange F1

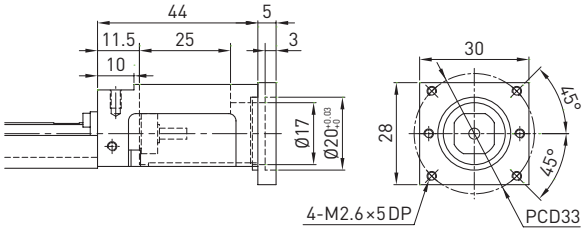

Motor adapter flange F2

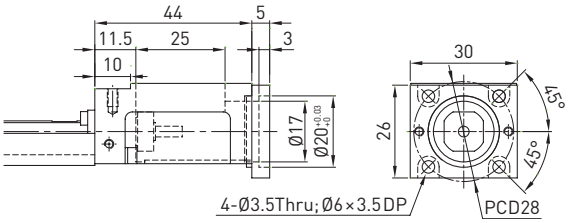

Motor adapter flange F3

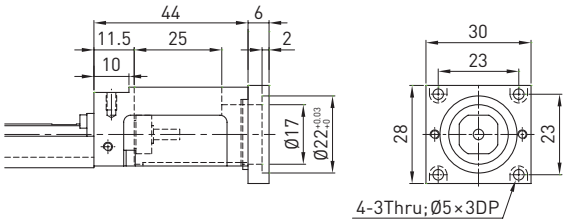

13.1.4 KK40 linear axes without cover

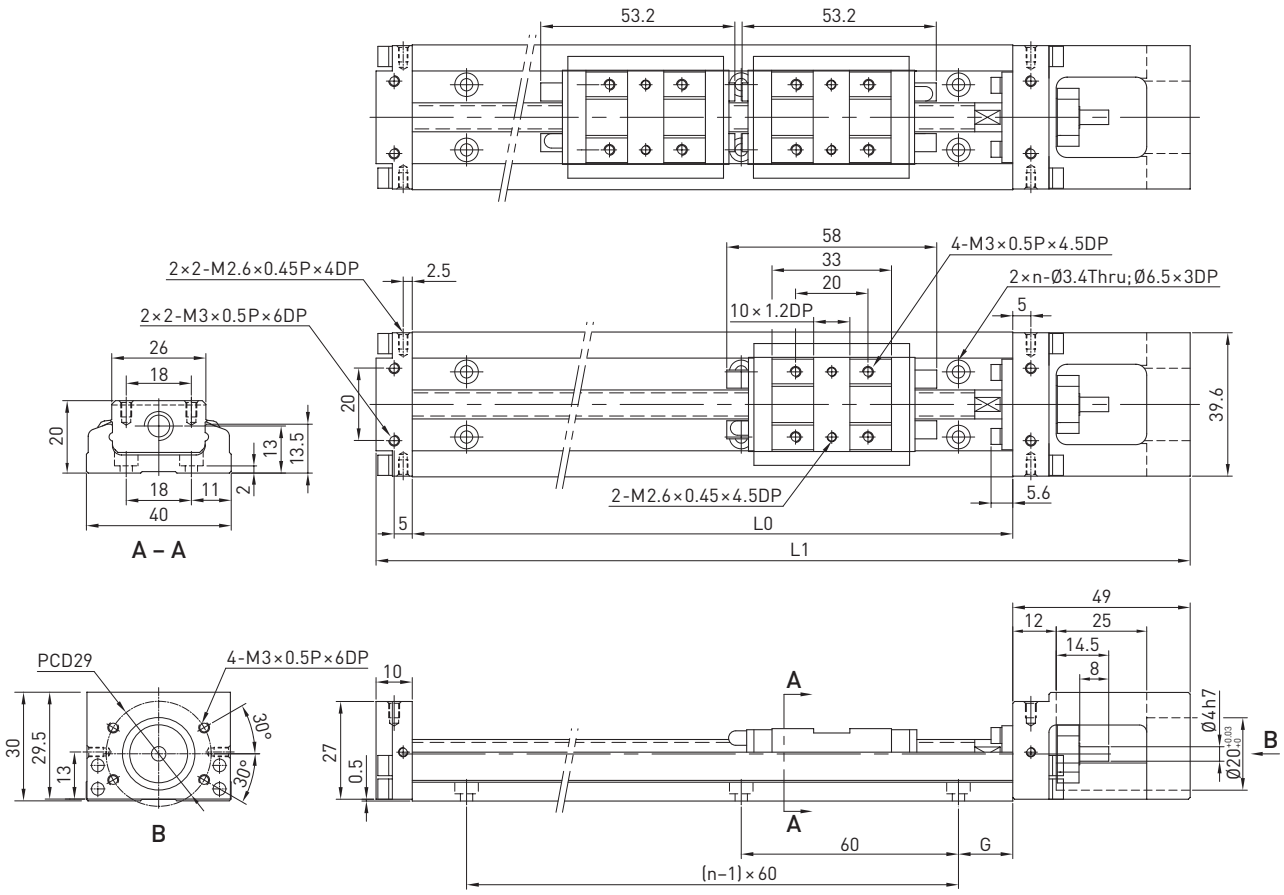

Table 13.3 **Dimensions and weights of KK40 linear axes without cover**

Model	Lead [mm]	L0 [mm]	L1 [mm]	Maximum stroke [mm]		G [mm]	n	Weight [kg]	
				Block A1	Block A2			Block A1	Block A2
KK4001P0100	1	100	159	36	—	20	2	0.48	—
KK4001P0150	1	150	209	86	34	15	3	0.60	0.67
KK4001P0200	1	200	259	136	84	40	3	0.72	0.79

Reference edge
Viewed from the motor flange, the reference edge is located on the left side of the linear axis.

13.1.5 KK40 linear axes with aluminium cover

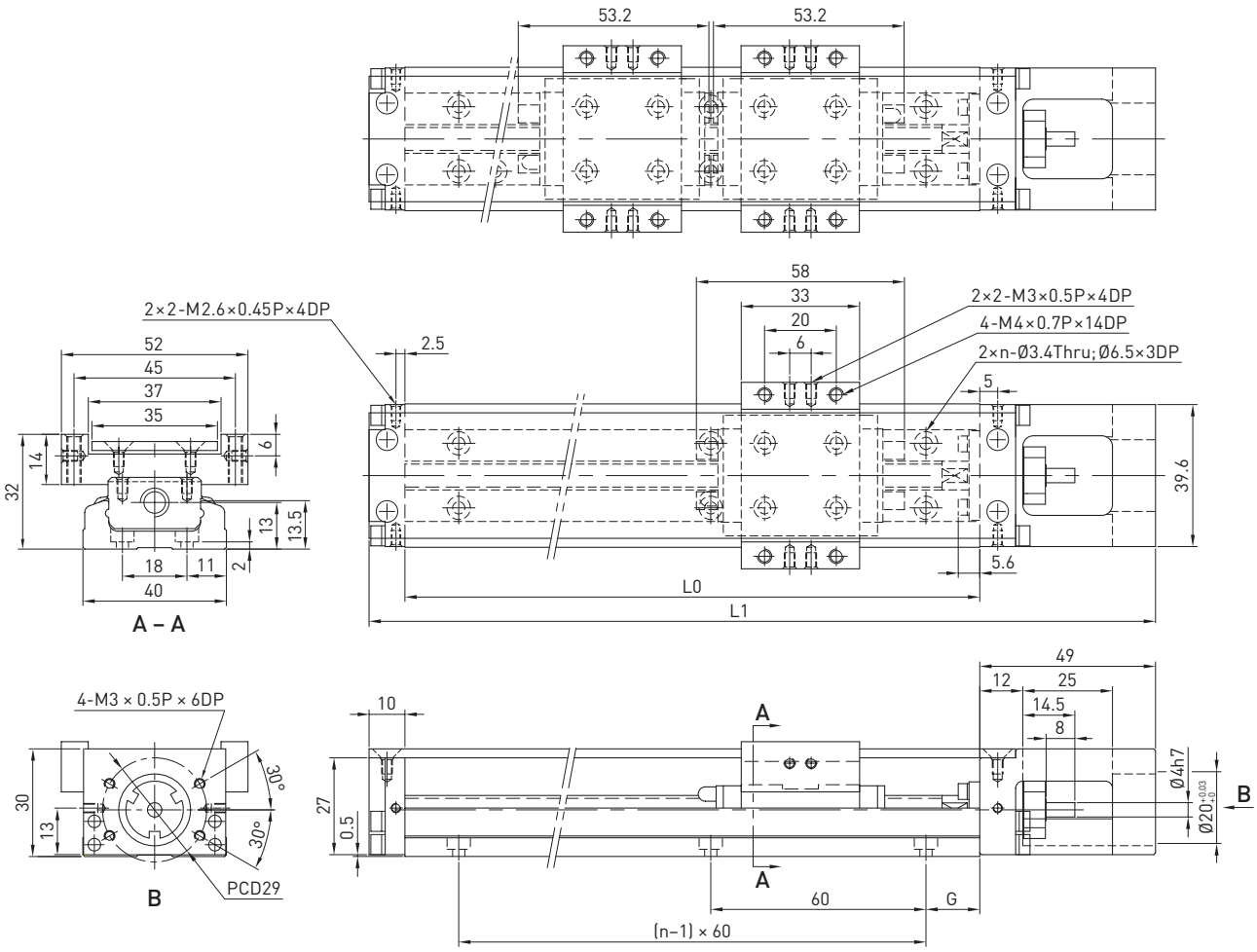

Table 13.4 **Dimensions and weights of KK40 linear axes with aluminium cover**

Model	Lead [mm]	L0 [mm]	L1 [mm]	Maximum stroke [mm]		G [mm]	n	Weight [kg]	
				Block A1	Block A2			Block A1	Block A2
KK4001P0100	1	100	159	36	—	20	2	0.55	—
KK4001P0150	1	150	209	86	34	15	3	0.68	0.76
KK4001P0200	1	200	259	136	84	40	3	0.82	0.89

Reference edge
Viewed from the motor flange, the reference edge is located on the left side of the linear axis.

13.1.6 KK40 adapter flanges

Motor adapter flange F0

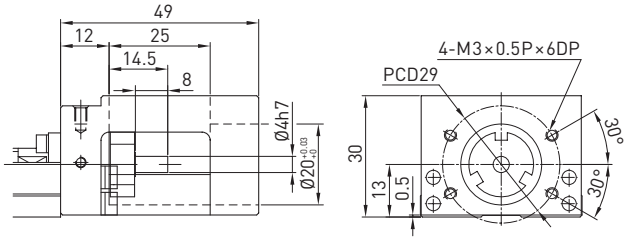

Motor adapter flange F1

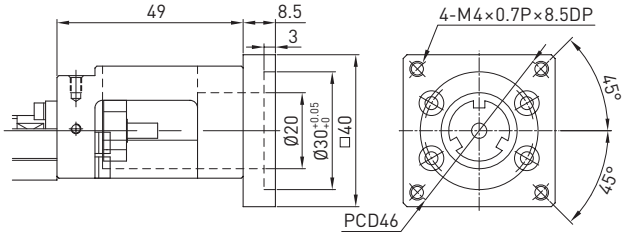

Motor adapter flange F2

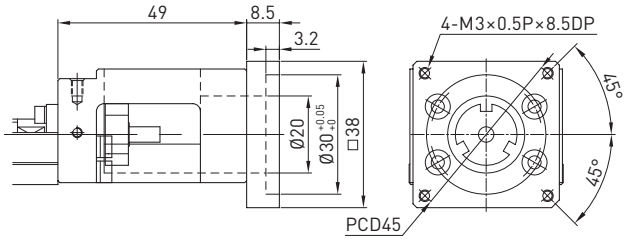

Motor adapter flange F3

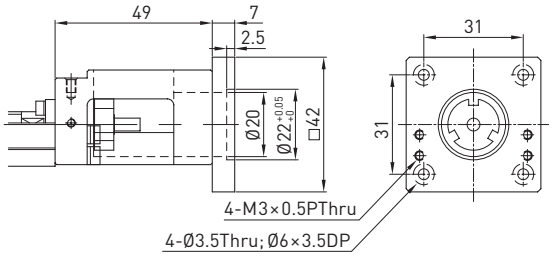

Motor adapter flange H0

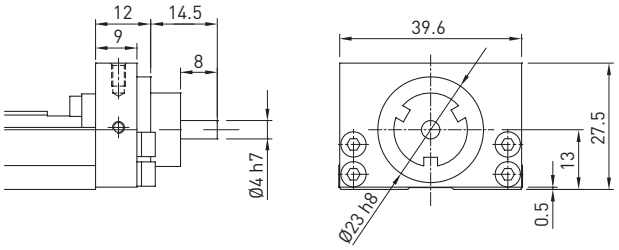

13.1.7 KK50 linear axes without cover

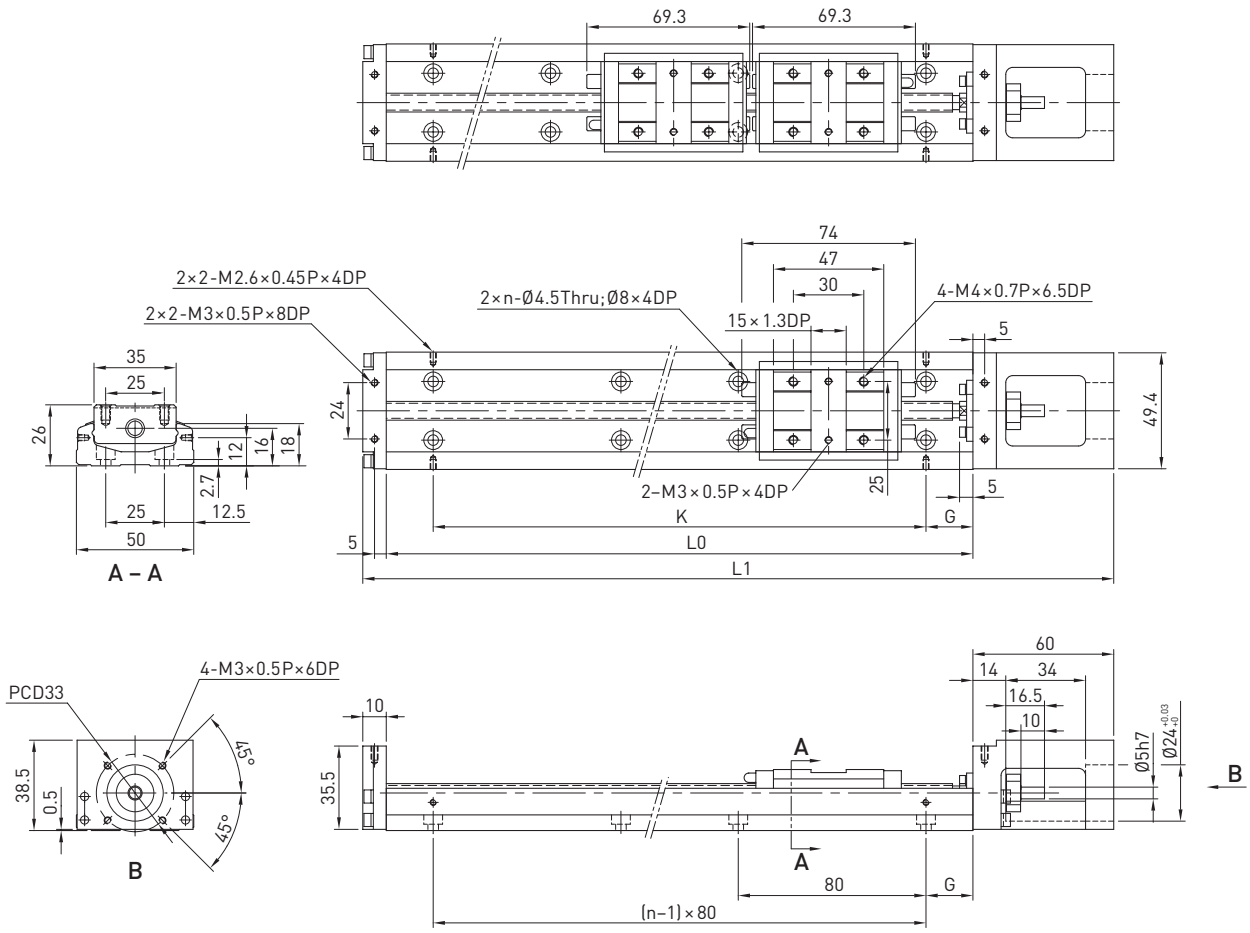

Table 13.5 **Dimensions and weights of KK50 linear axes without cover**

Model	Lead [mm]	L0 [mm]	L1 [mm]	Maximum stroke [mm]		G [mm]	K [mm]	n	Weight [kg]	
				Block A1	Block A2				Block A1	Block A2
KK5002P0150	2	150	220	70	—	35	80	2	1.0	—
KK5002P0200	2	200	270	120	55	20	160	3	1.2	1.4
KK5002P0250	2	250	320	170	105	45	160	3	1.4	1.6
KK5002P0300	2	300	370	220	155	30	240	4	1.6	1.8

Reference edge

Viewed from the motor flange, the reference edge is located on the left side of the linear axis.

13.1.8 KK50 linear axes with aluminium cover

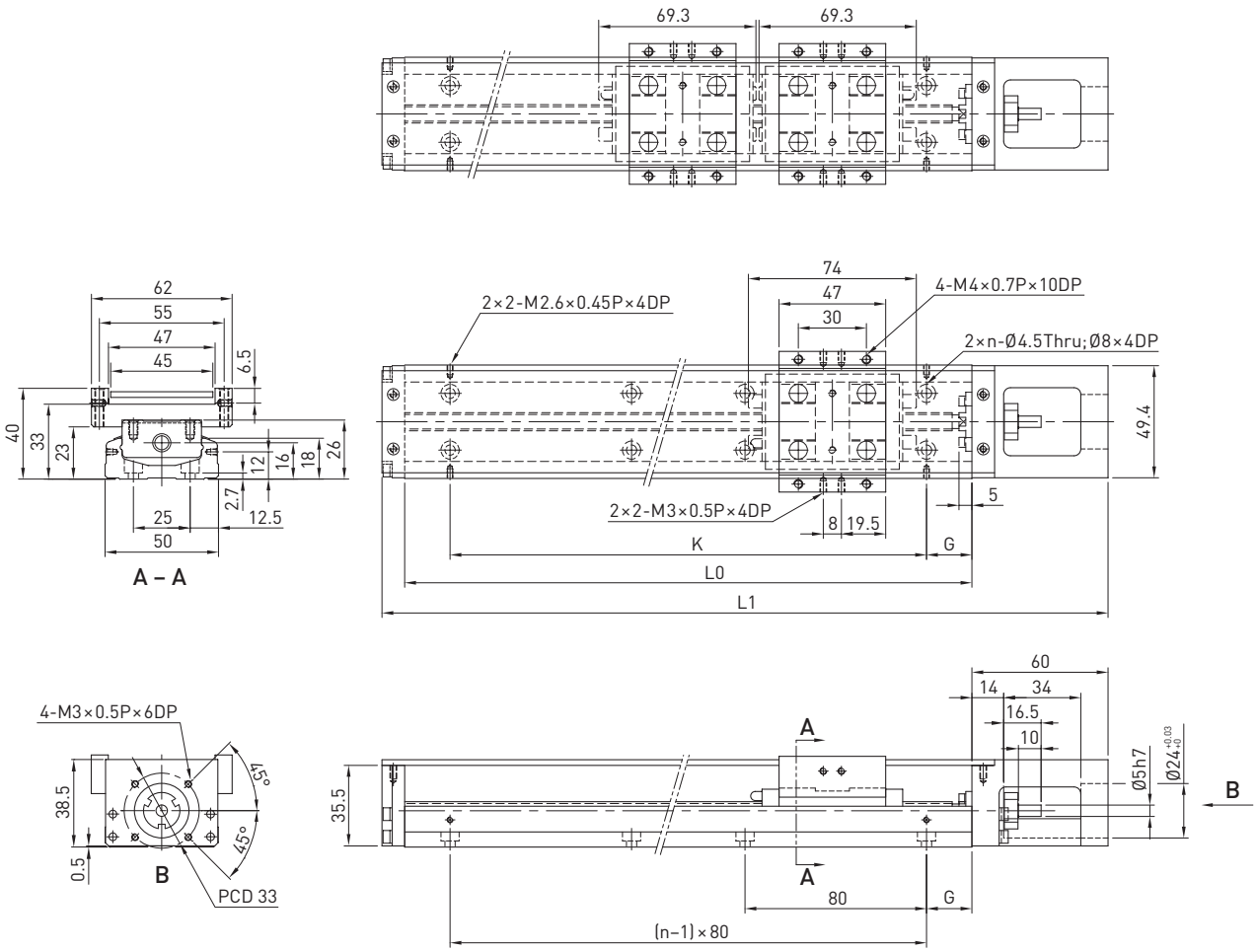

Table 13.6 **Dimensions and weights of KK50 linear axes with aluminium cover**

Model	Lead [mm]	L0 [mm]	L1 [mm]	Maximum stroke [mm]		G [mm]	K [mm]	n	Weight [kg]	
				Block A1	Block A2				Block A1	Block A2
KK5002P0150	2	150	220	70	—	35	80	2	1.1	—
KK5002P0200	2	200	270	120	55	20	160	3	1.3	1.5
KK5002P0250	2	250	320	170	105	45	160	3	1.6	1.8
KK5002P0300	2	300	370	220	155	30	240	4	1.8	2.0

Reference edge

Viewed from the motor flange, the reference edge is located on the left side of the linear axis.

13.1.9 KK50 adapter flanges

Motor adapter flange F0

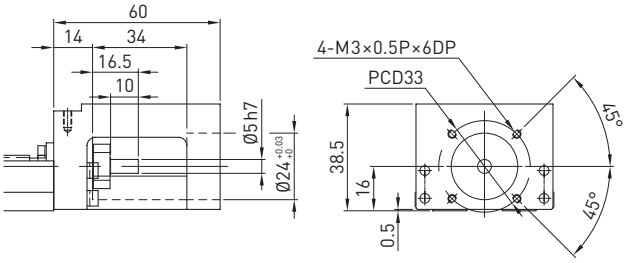

Motor adapter flange F1

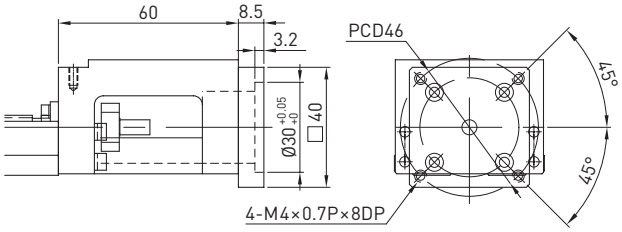

Motor adapter flange F2

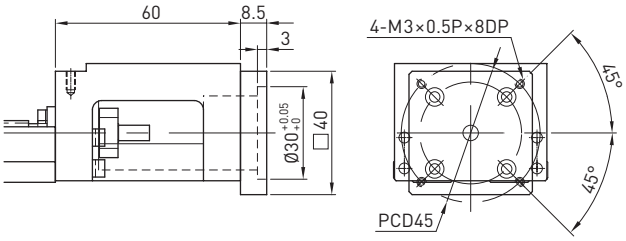

Motor adapter flange F3

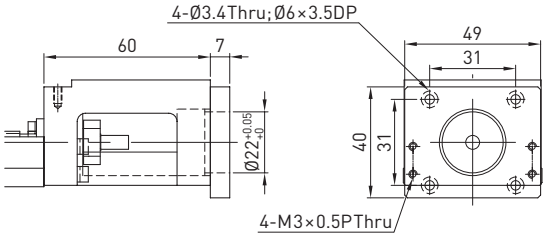

Motor adapter flange H0

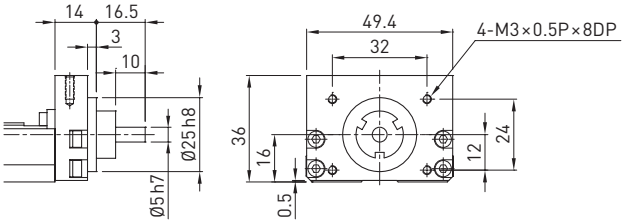

13.1.10 KK60 linear axes without cover, standard block

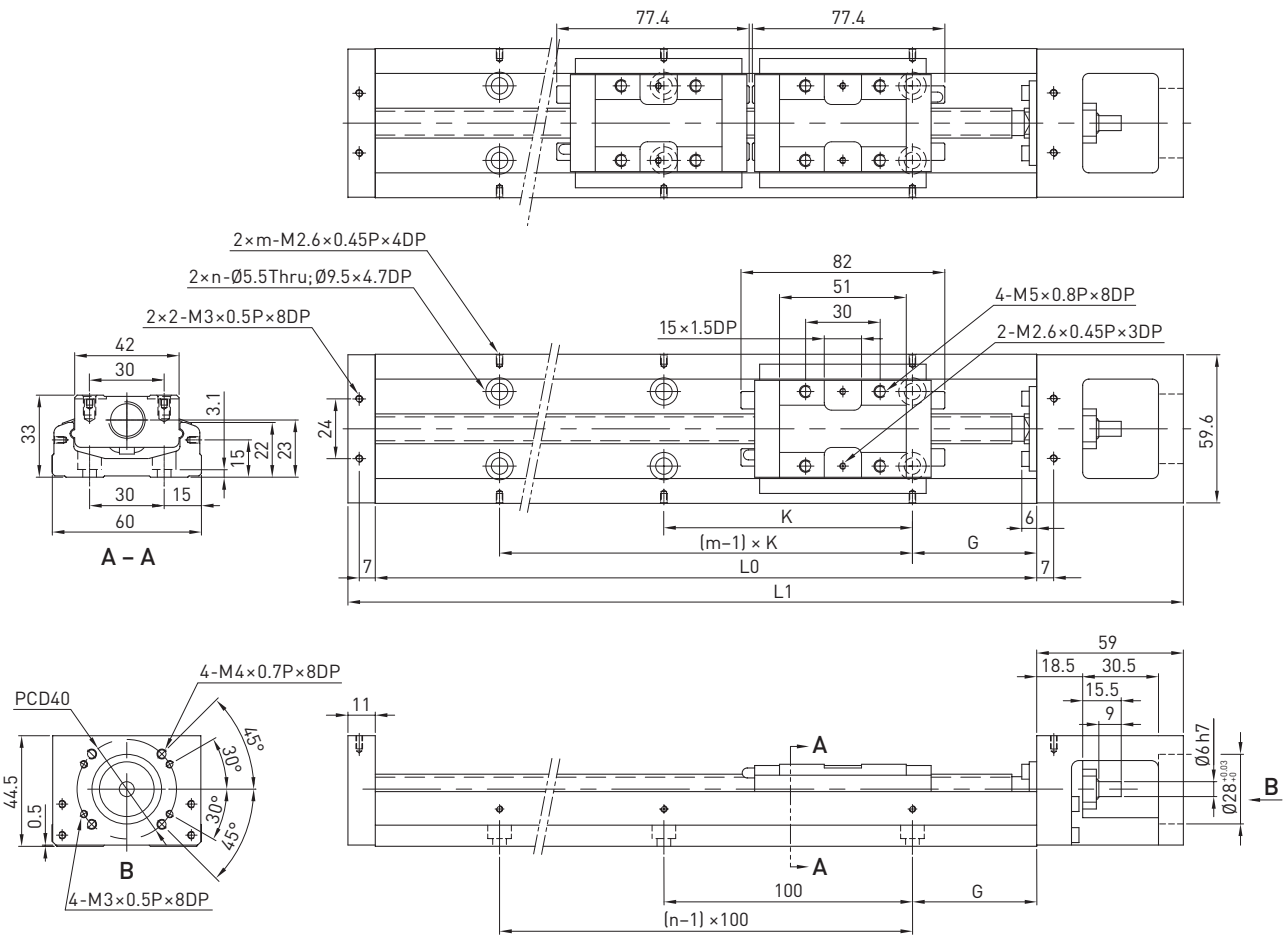

Table 13.7 **Dimensions and weights of KK60 linear axes without cover, standard block**

Model	Lead [mm]	L0 [mm]	L1 [mm]	Maximum stroke [mm]		G [mm]	K [mm]	n	m	Weight [kg]	
				Block A1	Block A2					Block A1	Block A2
KK6005P0150	5	150	220	60	—	25	100	2	2	1.5	—
KK6005P0200	5	200	270	110	—	50	100	2	2	1.8	—
KK6005P0300	5	300	370	210	135	50	200	3	2	2.4	2.7
KK6005P0400	5	400	470	310	235	50	100	4	4	3.0	3.3
KK6005P0500	5	500	570	410	335	50	200	5	3	3.6	3.9
KK6005P0600	5	600	670	510	435	50	100	6	6	4.2	4.6
KK6010P0150	10	150	220	60	—	25	100	2	2	1.5	—
KK6010P0200	10	200	270	110	—	50	100	2	2	1.8	—
KK6010P0300	10	300	370	110	135	50	200	3	2	2.4	2.7
KK6010P0400	10	400	470	310	235	50	100	4	4	3.0	3.3
KK6010P0500	10	500	570	410	335	50	200	5	3	3.6	3.9
KK6010P0600	10	600	670	510	435	50	100	6	6	4.2	4.6

Reference edge
Viewed from the motor flange, the reference edge is located on the left side of the linear axis.

13.1.11 KK60 linear axes without cover, short block
(available upon request)

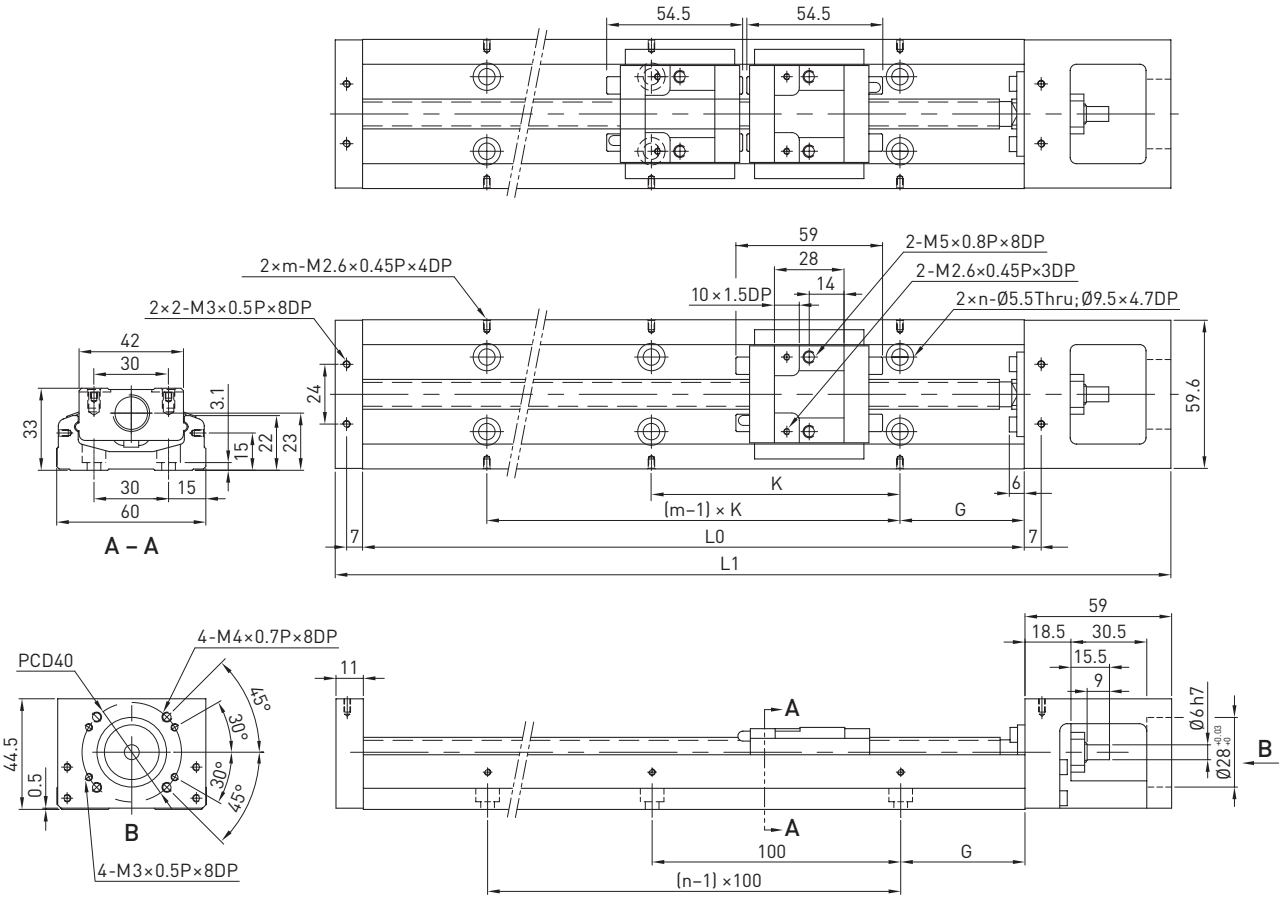

Table 13.8 **Dimensions and weights of KK60 linear axes, short block**

Model	Lead [mm]	L0 [mm]	L1 [mm]	Maximum stroke [mm]		G [mm]	K [mm]	n	m	Weight [kg]	
				Block S1	Block S2					Block S1	Block S2
KK6005P0150	5	150	220	85	34	25	100	2	2	1.4	1.6
KK6005P0200	5	200	270	135	84	50	100	2	2	1.7	1.9
KK6005P0300	5	300	370	235	184	50	200	3	2	2.3	2.5
KK6005P0400	5	400	470	335	284	50	100	4	4	2.9	3.1
KK6005P0500	5	500	570	435	384	50	200	5	3	3.5	3.7
KK6005P0600	5	600	670	535	484	50	100	6	6	4.1	4.3
KK6010P0150	10	150	220	85	34	25	100	2	2	1.4	1.6
KK6010P0200	10	200	270	135	84	50	100	2	2	1.7	1.9
KK6010P0300	10	300	370	235	184	50	200	3	2	2.3	2.5
KK6010P0400	10	400	470	335	284	50	100	4	4	2.9	3.1
KK6010P0500	10	500	570	435	384	50	200	5	3	3.5	3.7
KK6010P0600	10	600	670	535	484	50	100	6	6	4.1	4.3

Reference edge
Viewed from the motor flange, the reference edge is located on the left side of the linear axis.

13.1.12 KK60 linear axes with aluminium cover, standard block

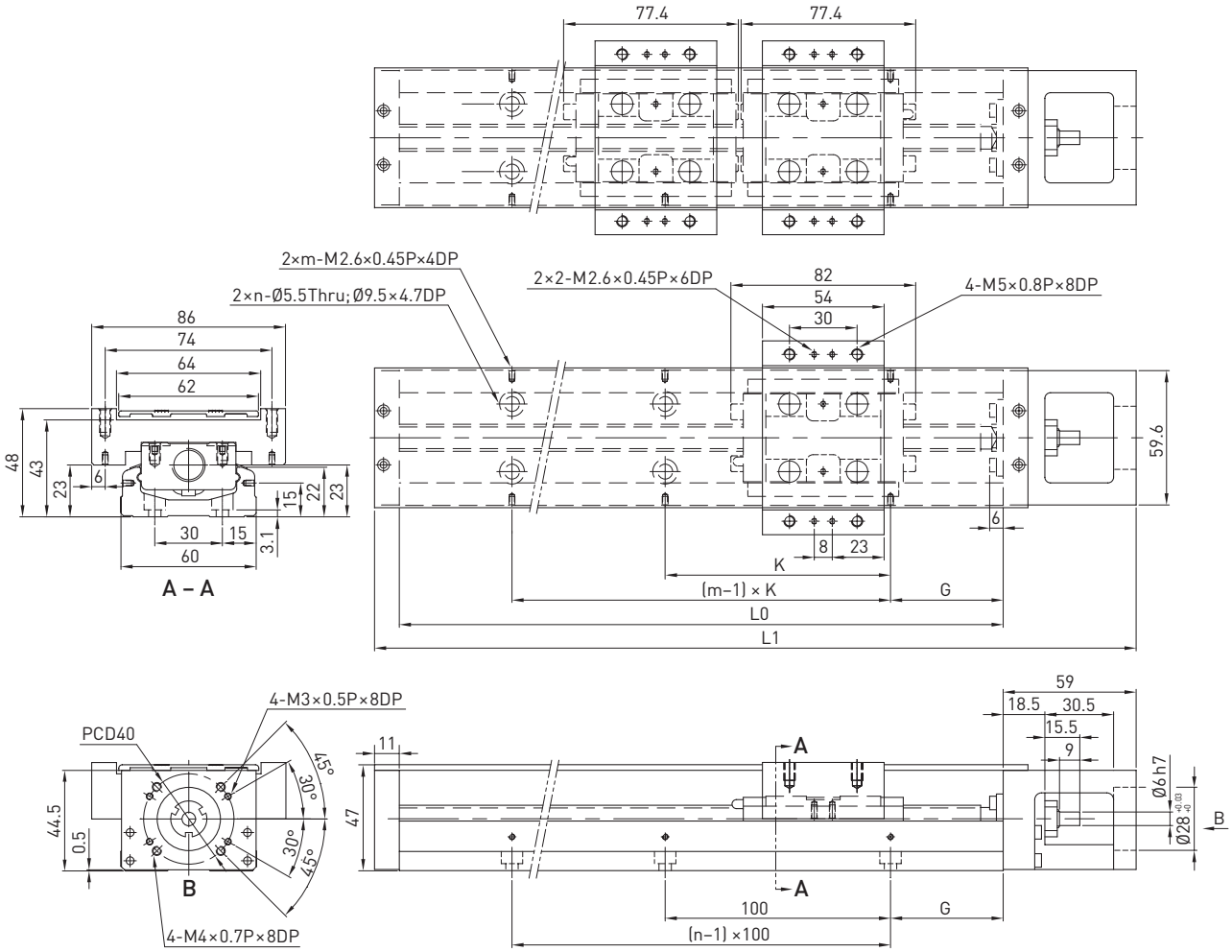

Table 13.9 **Dimension and weights of KK60 linear axes with aluminium cover, standard block**

Model	Lead [mm]	L0 [mm]	L1 [mm]	Maximum stroke [mm]		G [mm]	K [mm]	n	m	Weight [kg]	
				Block A1	Block A2					Block A1	Block A2
KK6005P0150	5	150	220	60	—	25	100	2	2	1.7	—
KK6005P0200	5	200	270	110	—	50	100	2	2	2.1	—
KK6005P0300	5	300	370	210	135	50	200	3	2	2.7	3.0
KK6005P0400	5	400	470	310	235	50	100	4	4	3.3	3.6
KK6005P0500	5	500	570	410	335	50	200	5	3	3.9	4.2
KK6005P0600	5	600	670	510	435	50	100	6	6	4.4	5.0
KK6010P0150	10	150	220	60	—	25	100	2	2	1.7	—
KK6010P0200	10	200	270	110	—	50	100	2	2	2.1	—
KK6010P0300	10	300	370	210	135	50	200	3	2	2.7	3.0
KK6010P0400	10	400	470	310	235	50	100	4	4	3.3	3.6
KK6010P0500	10	500	570	410	335	50	200	5	3	3.9	4.2
KK6010P0600	10	600	670	510	435	50	100	6	6	4.4	5.0

Reference edge

Viewed from the motor flange, the reference edge is located on the left side of the linear axis.

13.1.13 KK60 linear axes with aluminium cover, short block
(available upon request)

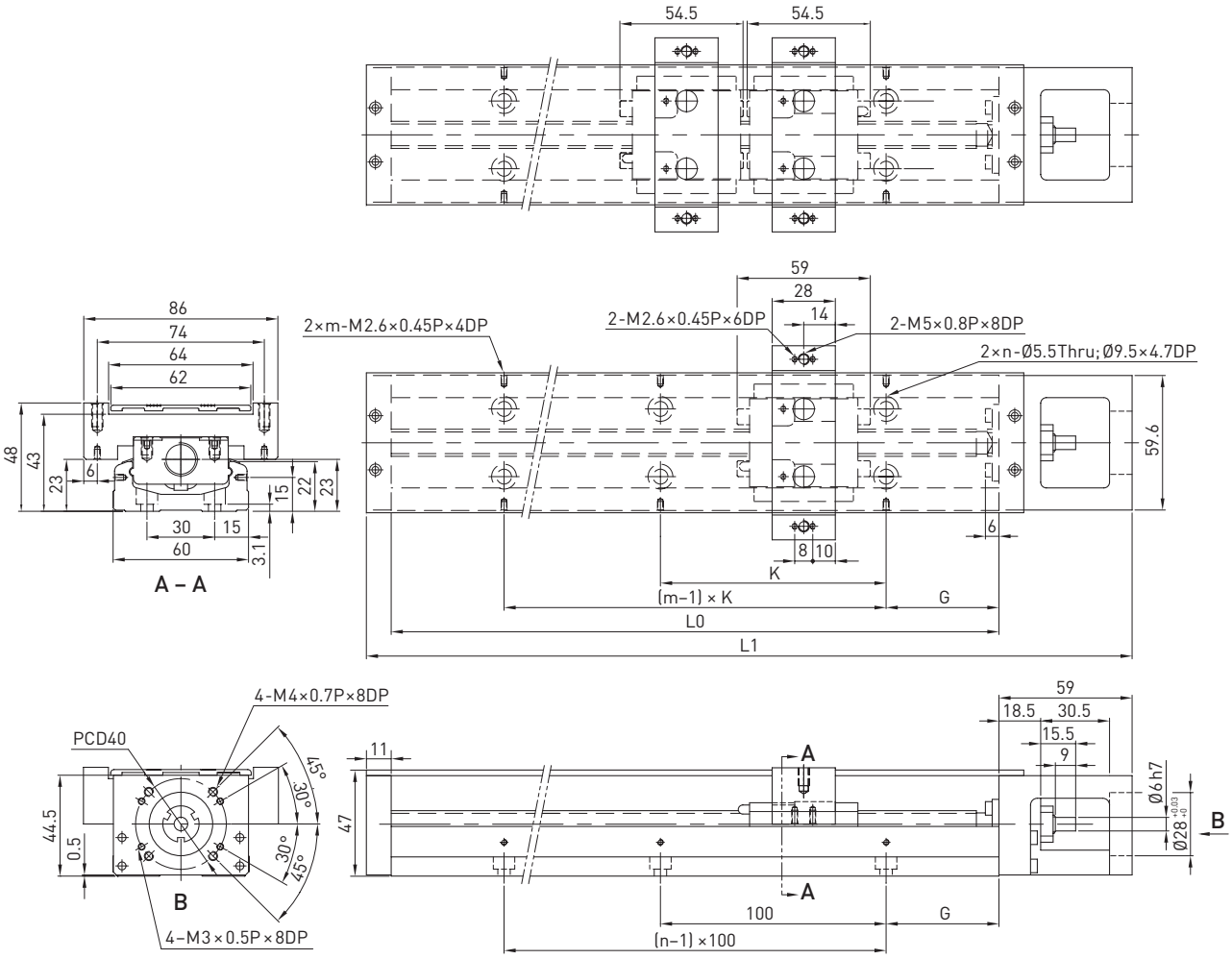

Table 13.10 **Dimension and weights of KK60 linear axes with aluminium cover, short block**

Model	Lead [mm]	L0 [mm]	L1 [mm]	Maximum stroke [mm]		G [mm]	K [mm]	n	m	Weight [kg]	
				Block S1	Block S2					Block S1	Block S2
KK6005P0150	5	150	220	85	34	25	100	2	2	1.6	1.8
KK6005P0200	5	200	270	135	84	50	100	2	2	1.9	2.1
KK6005P0300	5	300	370	235	184	50	200	3	2	2.5	2.7
KK6005P0400	5	400	470	335	284	50	100	4	4	3.1	3.3
KK6005P0500	5	500	570	435	384	50	200	5	3	3.7	3.9
KK6005P0600	5	600	670	535	484	50	100	6	6	4.4	4.6
KK6010P0150	10	150	220	85	34	25	100	2	2	1.6	1.8
KK6010P0200	10	200	270	135	84	50	100	2	2	1.9	2.1
KK6010P0300	10	300	370	235	184	50	200	3	2	2.5	2.7
KK6010P0400	10	400	470	335	284	50	100	4	4	3.1	3.3
KK6010P0500	10	500	570	435	384	50	200	5	3	3.7	3.9
KK6010P0600	10	600	670	535	484	50	100	6	6	4.4	4.6

Reference edge
Viewed from the motor flange, the reference edge is located on the left side of the linear axis.

13.1.14 KK60 linear axes with bellow cover

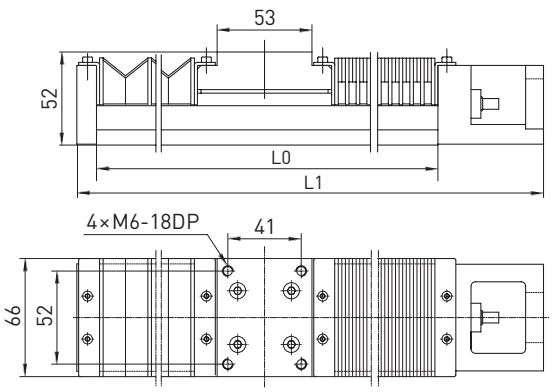

Table 13.11 **Dimension and weights of KK60 linear axes with bellow cover**

Model	Lead [mm]	L0 [mm]	L1 [mm]	Maximum stroke [mm]	Weight [kg]
KK6005P0150	5	150	220	45	1.7
KK6005P0200	5	200	270	77	2.1
KK6005P0300	5	300	370	151	2.7
KK6005P0400	5	400	470	230	3.3
KK6005P0500	5	500	570	300	3.9
KK6005P0600	5	600	670	376	4.6
KK6010P0150	10	150	220	45	1.7
KK6010P0200	10	200	270	77	2.1
KK6010P0300	10	300	370	151	2.7
KK6010P0400	10	400	470	230	3.3
KK6010P0500	10	500	570	300	3.9
KK6010P0600	10	600	670	376	4.6

13.1.15 KK60 adapter flanges

Motor adapter flange F0

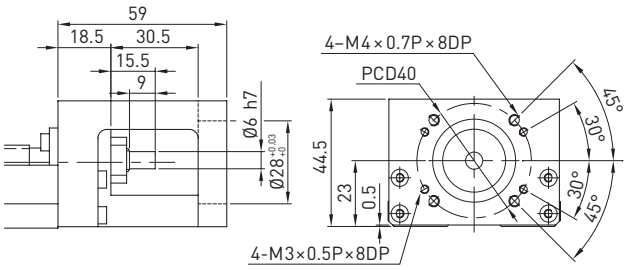

Motor adapter flange F1

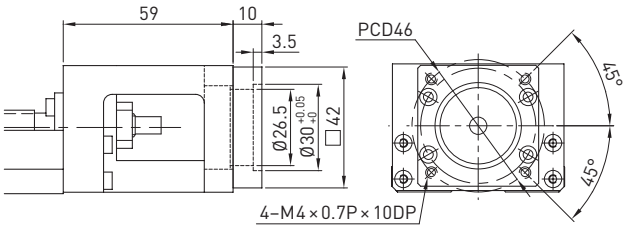

Motor adapter flange F2

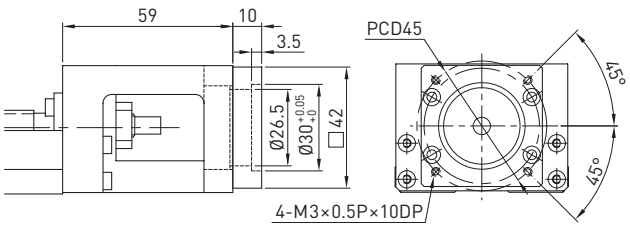

Motor adapter flange F3

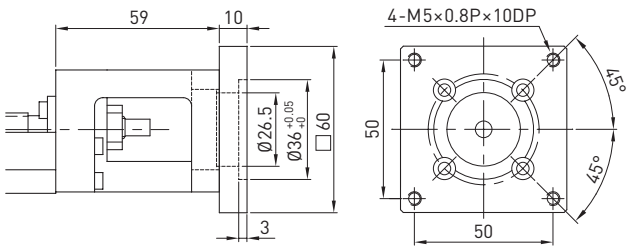

Appendix 2: Technical data

Motor adapter flange F4

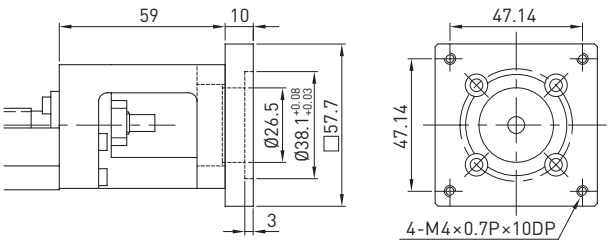

Motor adapter flange F5

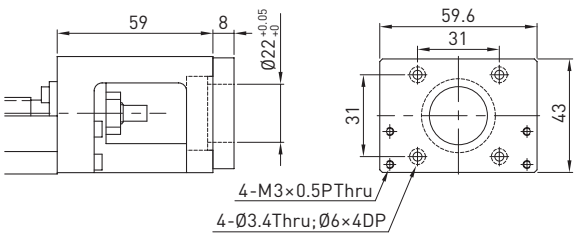

Motor adapter flange F6

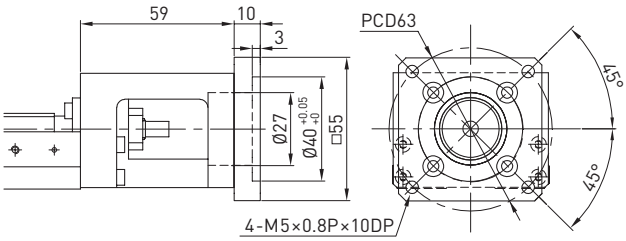

Motor adapter flange F8

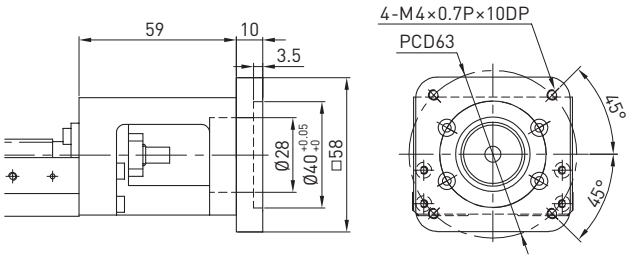

Motor adapter flange F10

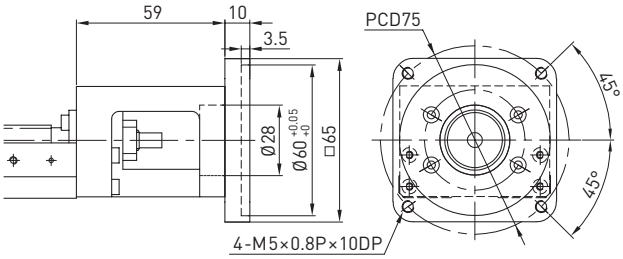

Motor adapter flange H0

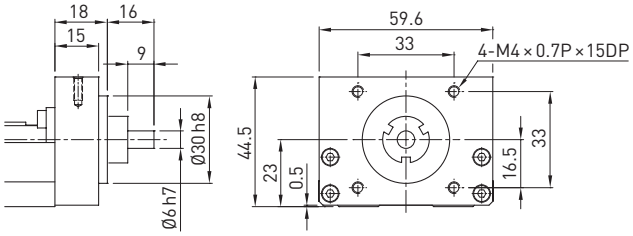

Motor adapter flange H1

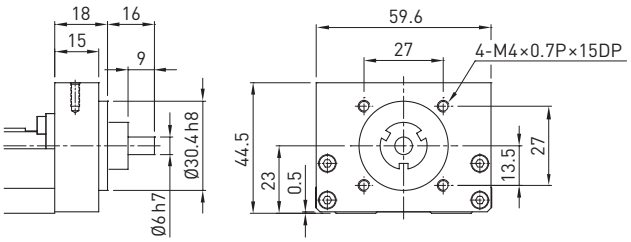

13.1.16 KK86 linear axes without cover, standard block

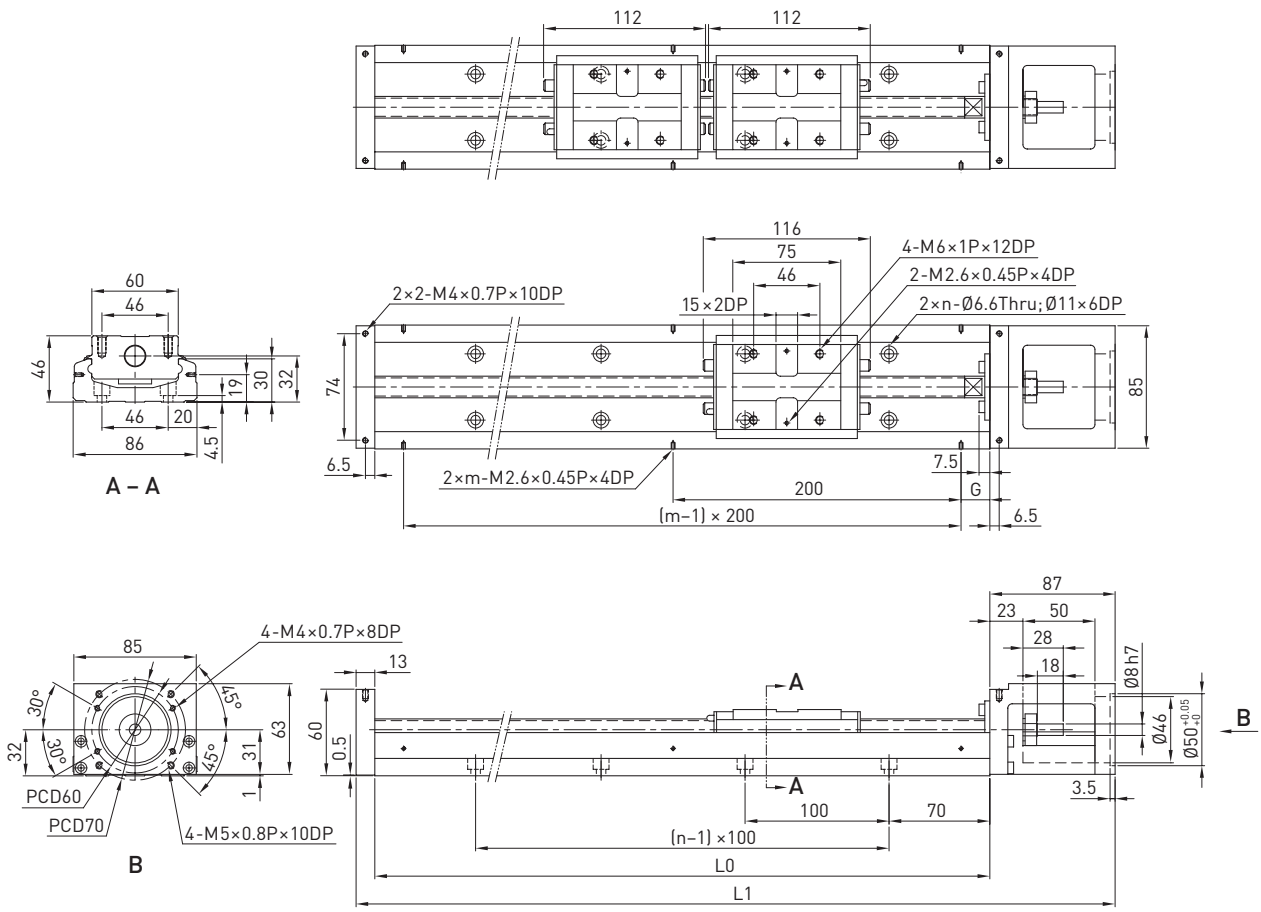

Table 13.12 **Dimensions and weights of KK86 linear axes without cover, standard block**

Model	Lead [mm]	L0 [mm]	L1 [mm]	Maximum stroke [mm]		G [mm]	n	m	Weight [kg]	
				Block A1	Block A2				Block A1	Block A2
KK8610P0340	10	340	440	210	100	70	3	2	5.7	6.5
KK8610P0440	10	440	540	310	200	20	4	3	6.9	7.7
KK8610P0540	10	540	640	410	300	70	5	3	8.0	8.8
KK8610P0640	10	640	740	510	400	20	6	4	9.2	10.0
KK8610P0740	10	740	840	610	500	70	7	4	10.4	11.2
KK8610P0940	10	940	1,040	810	700	70	9	5	11.6	12.4
KK8620P0340	20	340	440	210	100	70	3	2	5.7	6.5
KK8620P0440	20	440	540	310	200	20	4	3	6.9	7.7
KK8620P0540	20	540	640	410	300	70	5	3	8.0	8.8
KK8620P0640	20	640	740	510	400	20	6	4	9.2	10.0
KK8620P0740	20	740	840	610	500	70	7	4	10.4	11.2
KK8620P0940	20	940	1,040	810	700	70	9	5	11.6	12.4

Reference edge

Viewed from the motor flange, the reference edge is located on the left side of the linear axis.

13.1.17 KK86 linear axes without cover, short block
(available upon request)

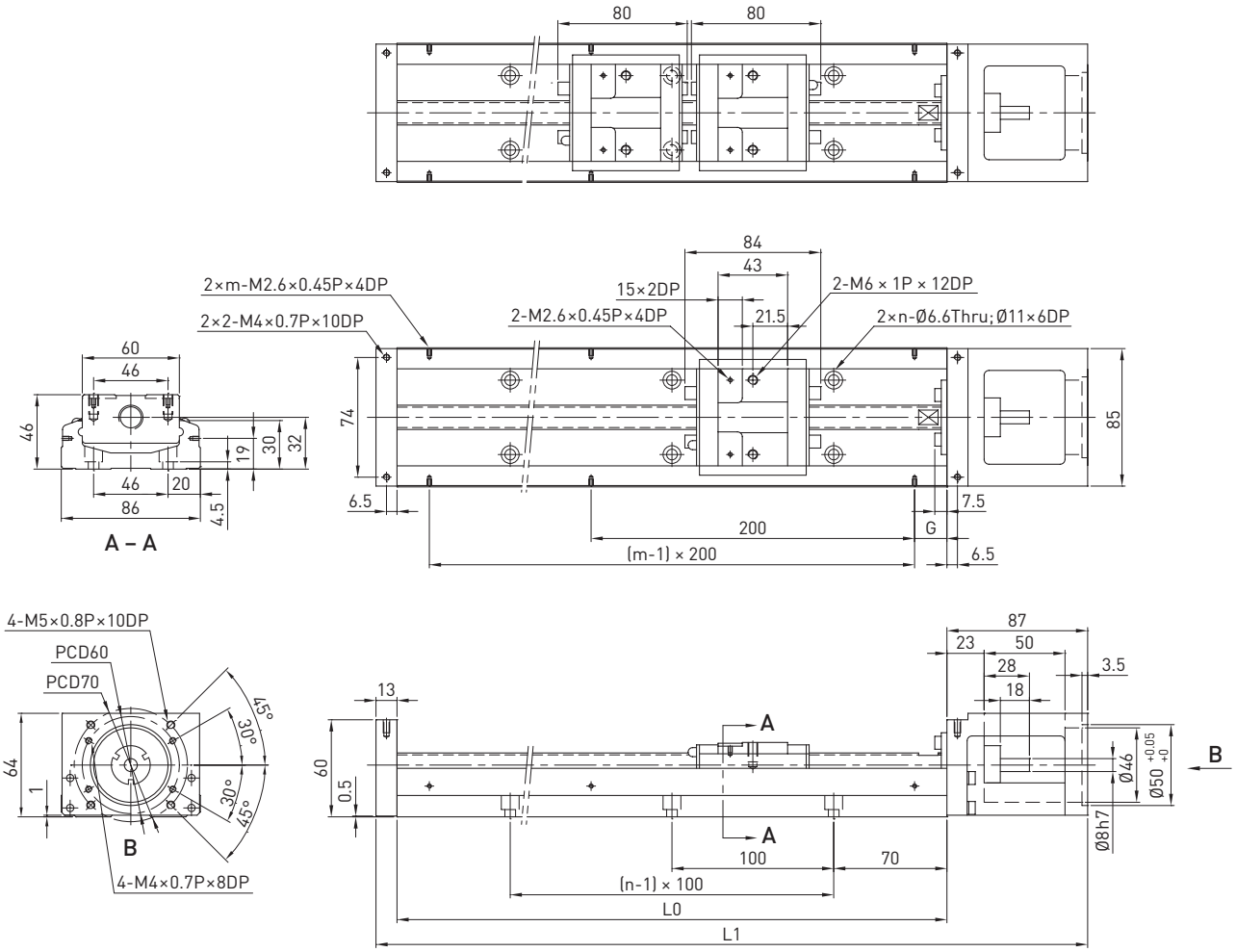

Table 13.13 **Dimensions and weights of KK86 linear axes without cover, short block**

Model	Lead [mm]	L0 [mm]	L1 [mm]	Maximum stroke [mm]		G [mm]	n	m	Weight [kg]	
				Block S1	Block S2				Block S1	Block S2
KK8610P0340	10	340	440	246	170	70	3	2	5.4	5.9
KK8610P0440	10	440	540	346	270	20	4	3	6.6	7.1
KK8610P0540	10	540	640	446	370	70	5	3	7.7	8.2
KK8610P0640	10	640	740	546	470	20	6	4	8.9	9.4
KK8610P0740	10	740	840	646	570	70	7	4	10.1	10.6
KK8610P0940	10	940	1,040	846	770	70	9	5	11.3	11.8
KK8620P0340	20	340	440	246	170	70	3	2	5.4	5.9
KK8620P0440	20	440	540	346	270	20	4	3	6.6	7.1
KK8620P0540	20	540	640	446	370	70	5	3	7.7	8.2
KK8620P0640	20	640	740	546	470	20	6	4	8.9	9.4
KK8620P0740	20	740	840	646	570	70	7	4	10.1	10.6
KK8620P0940	20	940	1,040	846	770	70	9	5	11.3	11.8

Reference edge
Viewed from the motor flange, the reference edge is located on the left side of the linear axis.

13.1.18 KK86 linear axes with aluminium cover, standard block

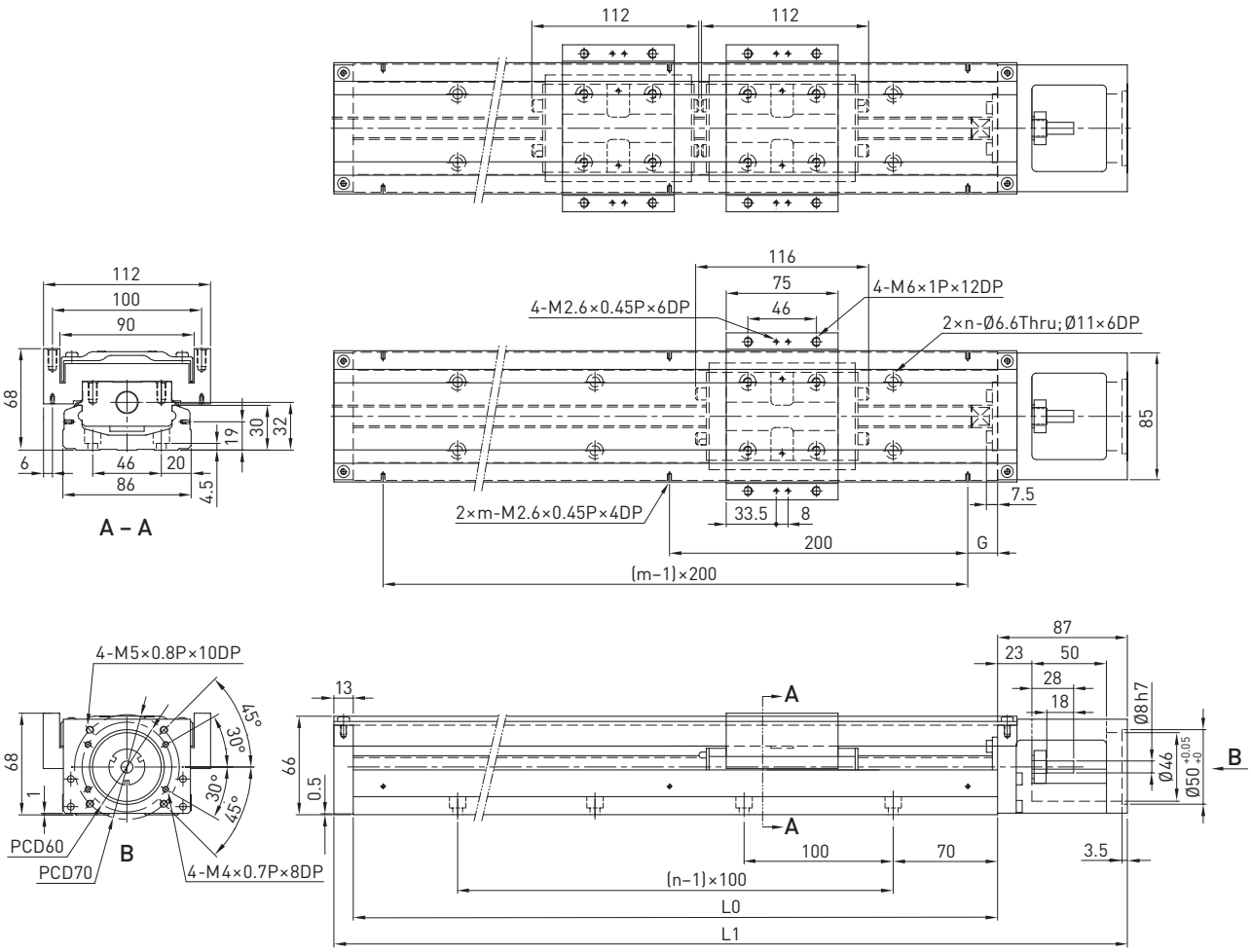

Table 13.14 **Dimensions and weights of KK86 linear axes with aluminium cover, standard block**

Model	Lead [mm]	L0 [mm]	L1 [mm]	Maximum stroke [mm]		G [mm]	n	m	Weight [kg]	
				Block A1	Block A2				Block A1	Block A2
KK8610P0340	10	340	440	210	100	70	3	2	6.5	7.3
KK8610P0440	10	440	540	310	200	20	4	3	7.8	8.6
KK8610P0540	10	540	640	410	300	70	5	3	9.0	9.8
KK8610P0640	10	640	740	510	400	20	6	4	10.3	11.3
KK8610P0740	10	740	840	610	500	70	7	4	11.6	12.4
KK8610P0940	10	940	1,040	810	700	70	9	5	13.0	13.8
KK8620P0340	20	340	440	210	100	70	3	2	6.5	7.3
KK8620P0440	20	440	540	310	200	20	4	3	7.8	8.6
KK8620P0540	20	540	640	410	300	70	5	3	9.0	9.8
KK8620P0640	20	640	740	510	400	20	6	4	10.3	11.3
KK8620P0740	20	740	840	610	500	70	7	4	11.6	12.4
KK8620P0940	20	940	1,040	810	700	70	9	5	13.0	13.8

Reference edge

Viewed from the motor flange, the reference edge is located on the left side of the linear axis.

13.1.19 KK86 linear axes with aluminium cover, short block
(available upon request)

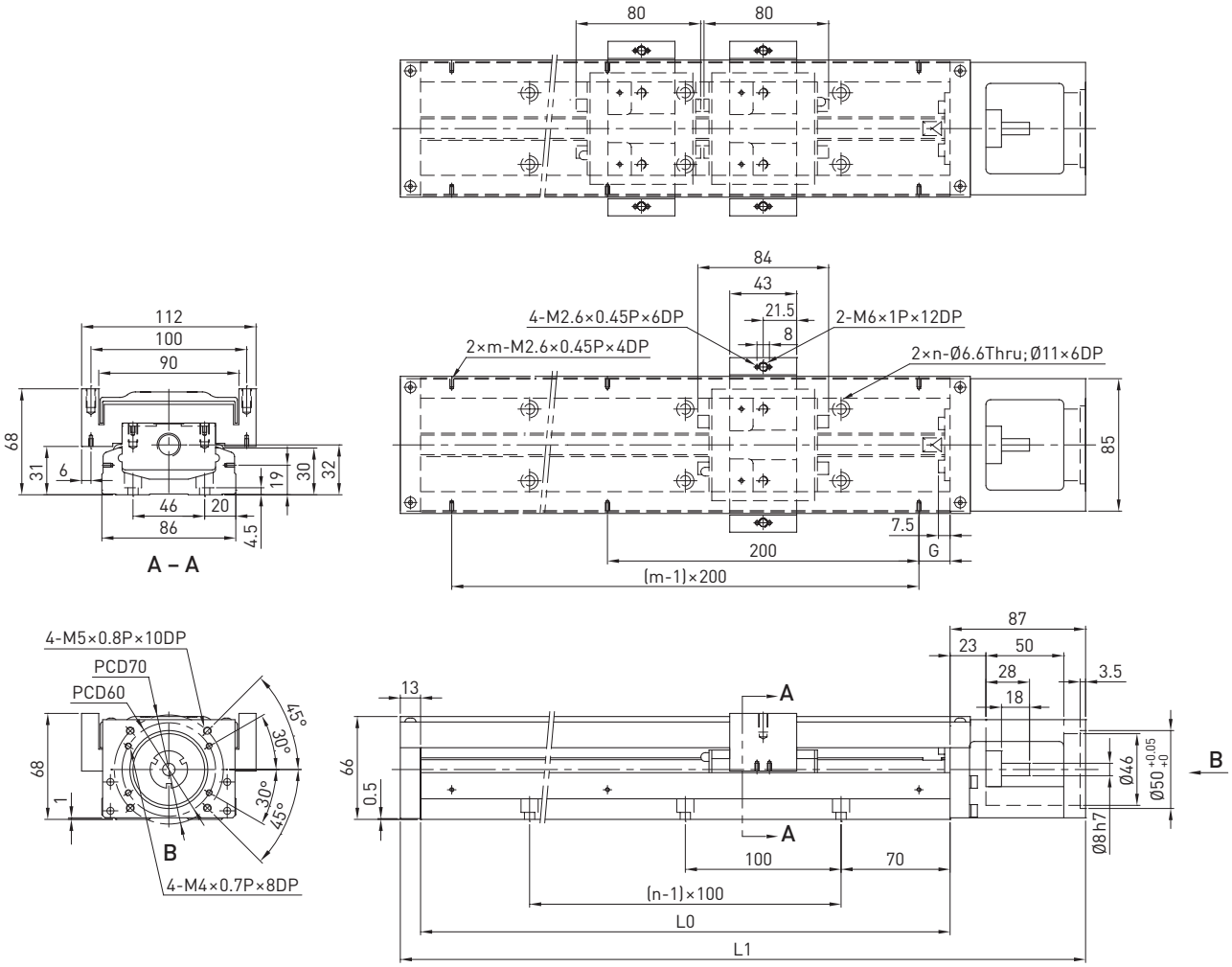

Table 13.15 **Dimensions and weights of KK86 linear axes with aluminium cover, short block**

Model	Lead [mm]	L0 [mm]	L1 [mm]	Maximum stroke [mm]		G [mm]	n	m	Weight [kg]	
				Block S1	Block S2				Block S1	Block S2
KK8610P0340	10	340	440	246	170	70	3	2	6.3	7.1
KK8610P0440	10	440	540	346	270	20	4	3	7.6	8.4
KK8610P0540	10	540	640	446	370	70	5	3	8.8	9.6
KK8610P0640	10	640	740	546	470	20	6	4	10.1	11.1
KK8610P0740	10	740	840	646	570	70	7	4	11.4	12.2
KK8610P0940	10	940	1,040	846	770	70	9	5	12.8	13.6
KK8620P0340	20	340	440	246	170	70	3	2	6.3	7.1
KK8620P0440	20	440	540	346	270	20	4	3	7.6	8.4
KK8620P0540	20	540	640	446	370	70	5	3	8.8	9.6
KK8620P0640	20	640	740	546	470	20	6	4	10.1	11.1
KK8620P0740	20	740	840	646	570	70	7	4	11.4.	12.2
KK8620P0940	20	940	1,040	846	770	70	9	5	12.8	13.6

Reference edge
Viewed from the motor flange, the reference edge is located on the left side of the linear axis.

13.1.20 KK86 linear axes with bellow cover

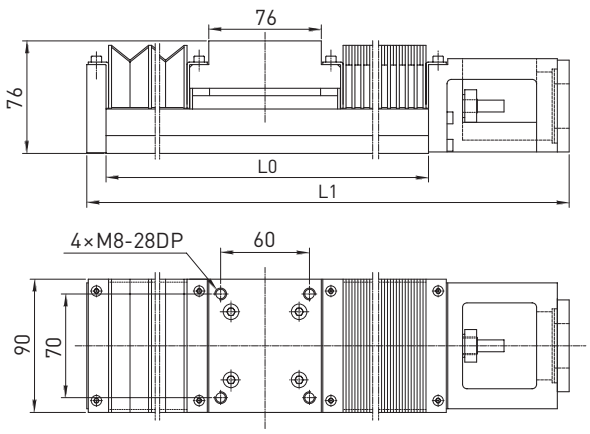

Table 13.16 **Dimensions and weights of KK86 linear axes with bellow cover**

Model	Lead [mm]	L0 [mm]	L1 [mm]	Maximum stroke [mm]	Weight [kg]
KK8610P0340	10	340	440	174	6.3
KK8610P0440	10	440	540	248	7.6
KK8610P0540	10	540	640	327	8.8
KK8610P0640	10	640	740	410	10.0
KK8610P0740	10	740	840	491	11.3
KK8610P0940	10	940	1,040	654	12.7
KK8620P0340	20	340	440	174	6.3
KK8620P0440	20	440	540	248	7.6
KK8620P0540	20	540	640	327	8.8
KK8620P0640	20	640	740	410	10.0
KK8620P0740	20	740	840	491	11.3
KK8620P0940	20	940	1,040	654	12.7

13.1.21 KK86 adapter flanges

Motor adapter flange F0

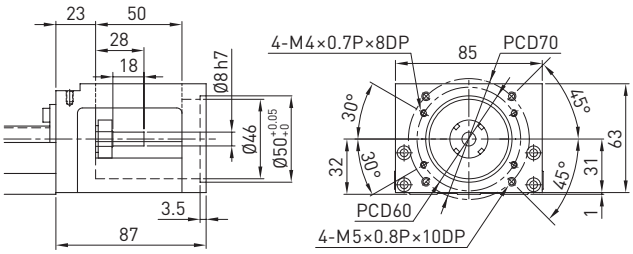

Motor adapter flange F1

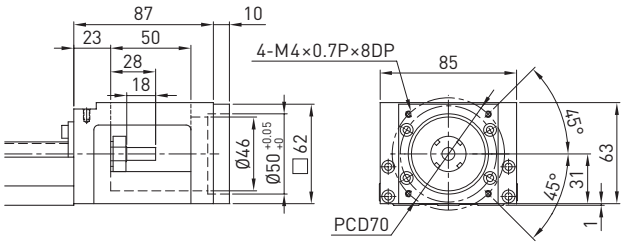

Motor adapter flange F2

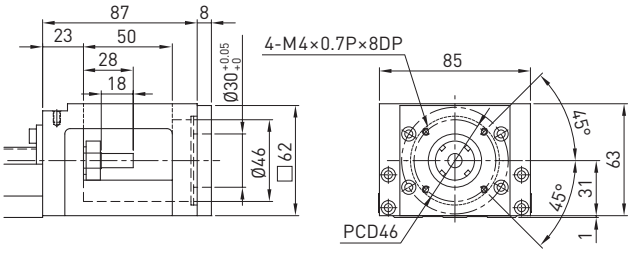

Motor adapter flange F3

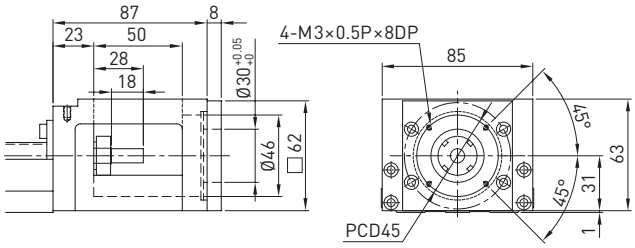

Motor adapter flange F4

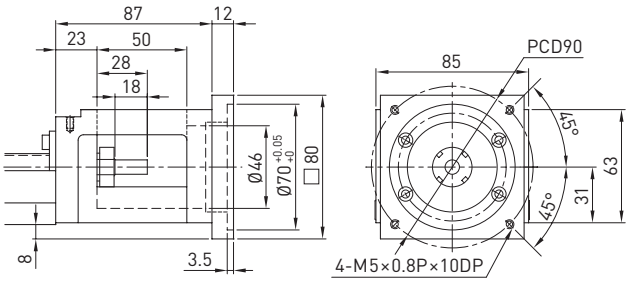

Motor adapter flange F5

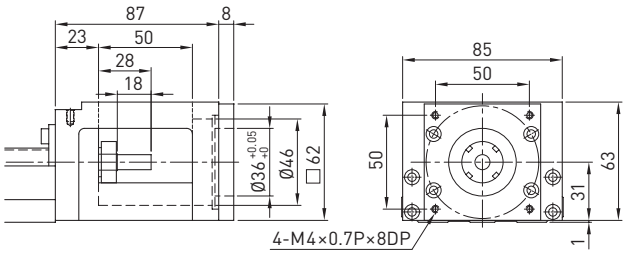

Motor adapter flange F6

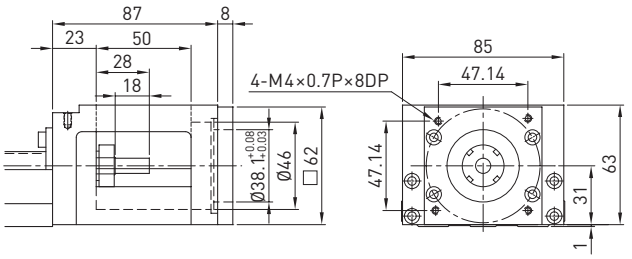

Motor adapter flange F7

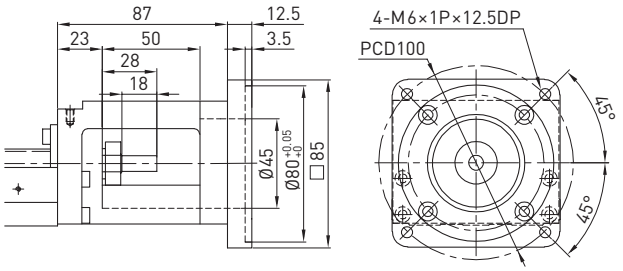

Motor adapter flange F8

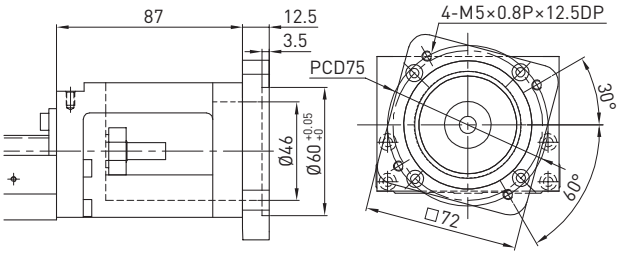

Motor adapter flange H0

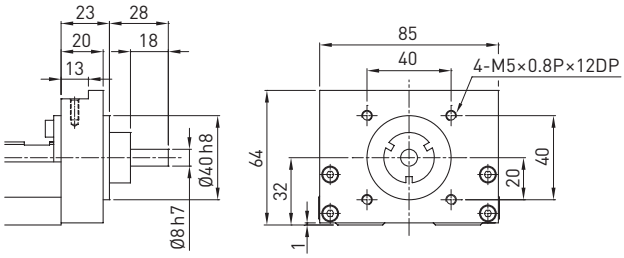

13.1.22 KK100 linear axes without cover

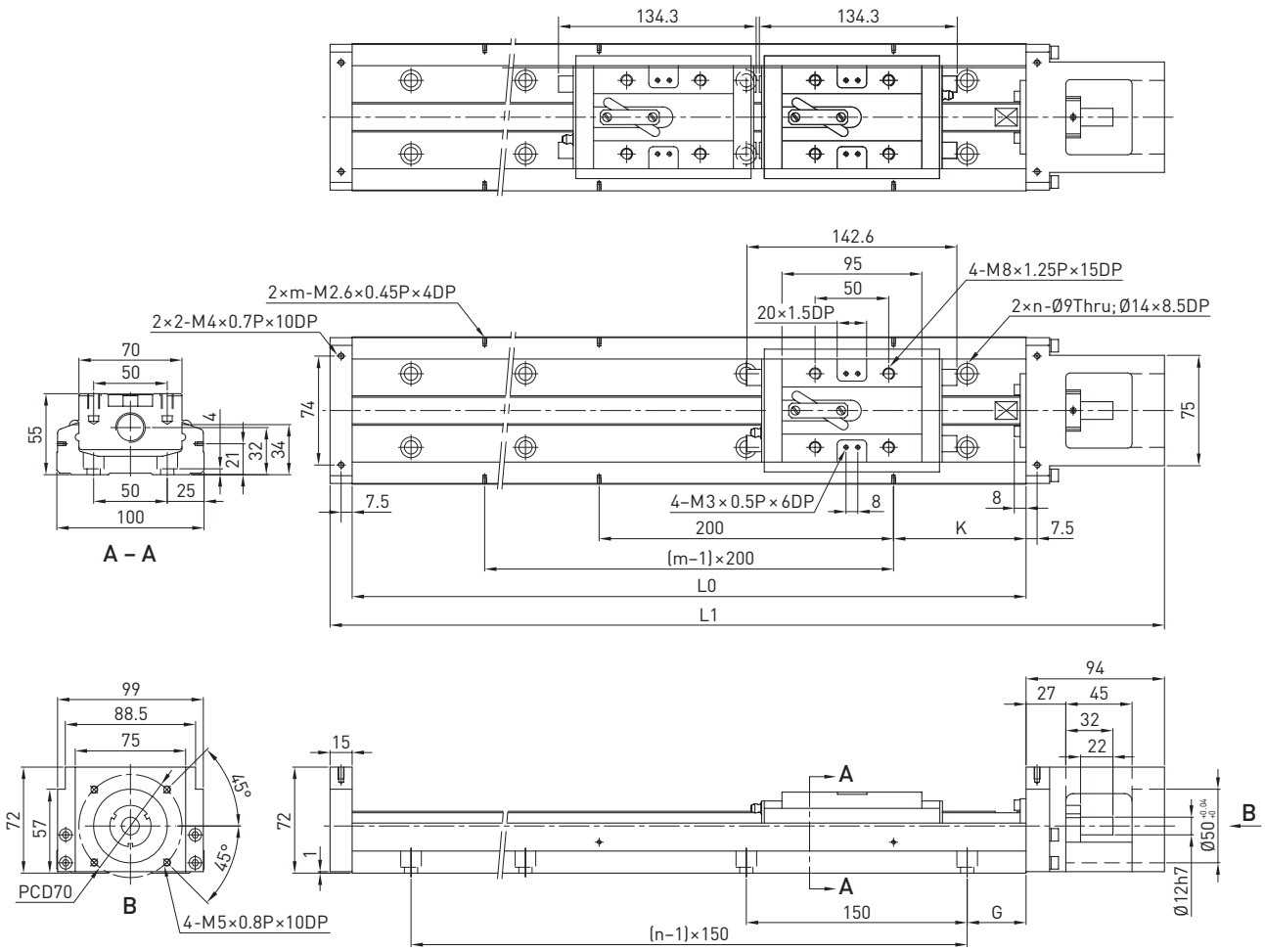

Table 13.17 **Dimensions and weights of KK100 linear axes without cover**

Model	Lead [mm]	L0 [mm]	L1 [mm]	Maximum stroke [mm]		G [mm]	K [mm]	n	m	Weight [kg]	
				Block A1	Block A2					Block A1	Block A2
KK10020P0980	20	980	1,089	828	700	40	90	7	5	18.6	20.3
KK10020P1080	20	1,080	1,189	928	800	15	40	8	6	20.3	22.0
KK10020P1180	20	1,180	1,289	1,028	900	65	90	8	6	22.0	23.7
KK10020P1280	20	1,280	1,389	1,128	1,000	40	40	9	7	23.6	25.3
KK10020P1380	20	1,380	1,489	1,228	1,100	15	90	10	7	25.3	27.0

Reference edge

Viewed from the motor flange, the reference edge is located on the left side of the linear axis.

13.1.23 KK100 linear axes with aluminium cover

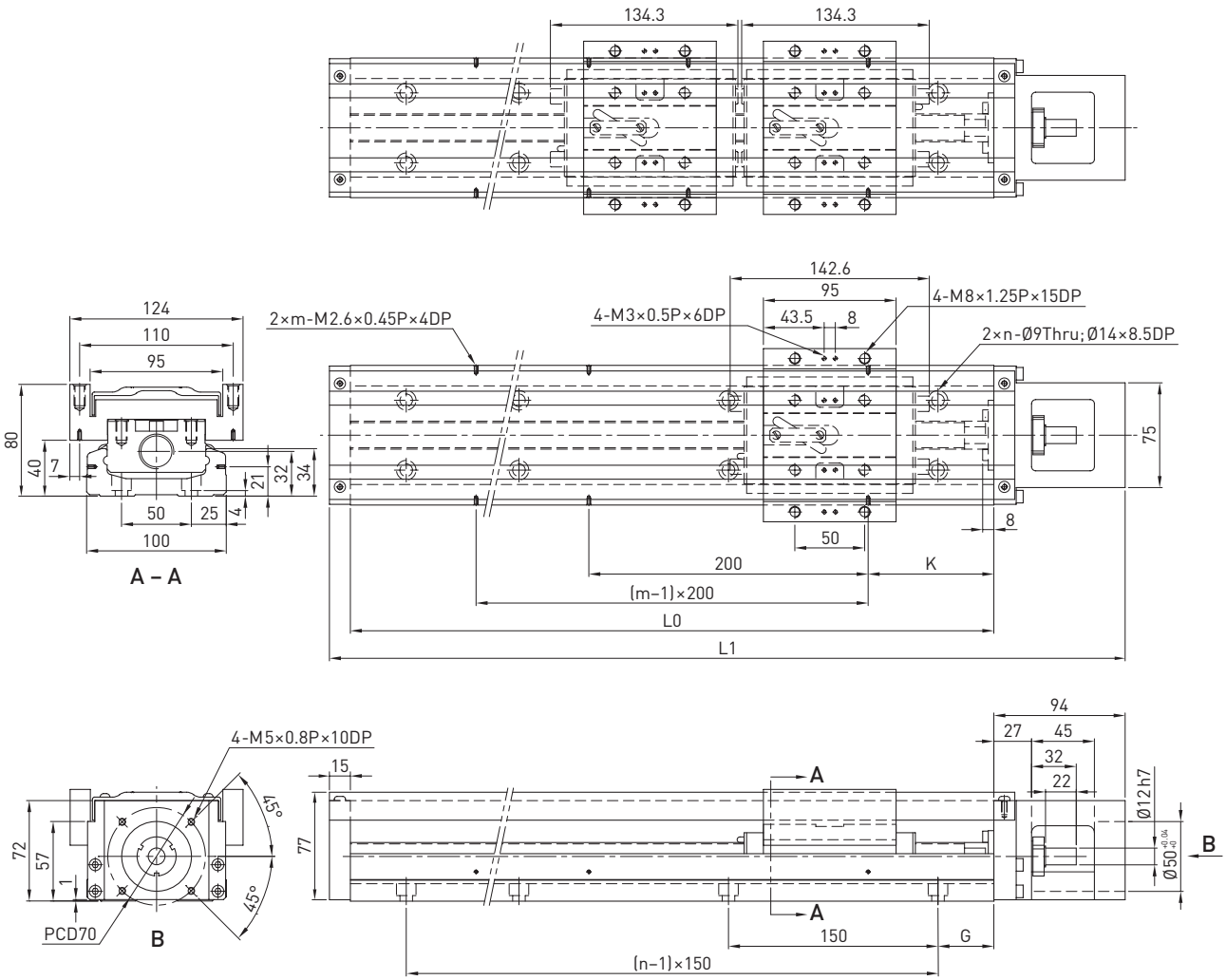

Table 13.18 **Dimensions and weights of KK100 linear axes with aluminium cover**

Model	Lead [mm]	L0 [mm]	L1 [mm]	Maximum stroke [mm]		G [mm]	K [mm]	n	m	Weight [kg]	
				Block A1	Block A2					Block A1	Block A2
KK10020P0980	20	980	1,089	828	700	40	90	7	5	20.4	22.1
KK10020P1080	20	1,080	1,189	928	800	15	40	8	6	22.2	23.9
KK10020P1180	20	1,180	1,289	1,028	900	65	90	8	6	24.0	25.7
KK10020P1280	20	1,280	1,389	1,128	1,000	40	40	9	7	25.7	27.4
KK10020P1380	20	1,380	1,489	1,228	1,100	15	90	10	7	27.5	29.2

Reference edge

Viewed from the motor flange, the reference edge is located on the left side of the linear axis.

13.1.24 KK100 adapter flanges

Motor adapter flange F0

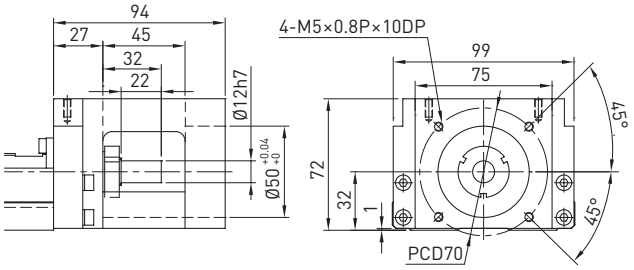

Motor adapter flange F1

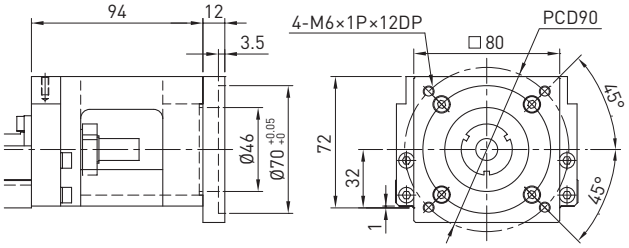

Motor adapter flange F2

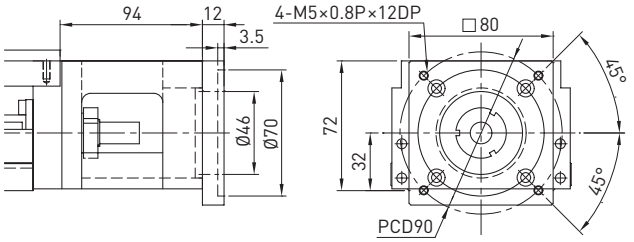

Motor adapter flange F3

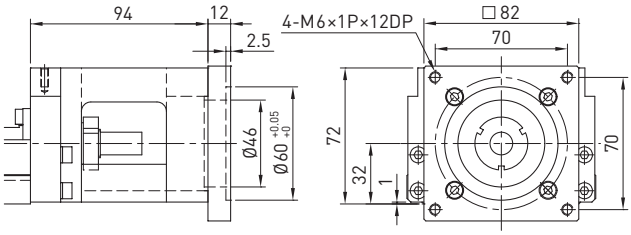

Motor adapter flange F4

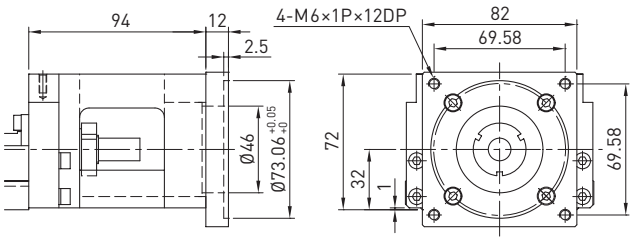

Motor adapter flange F5

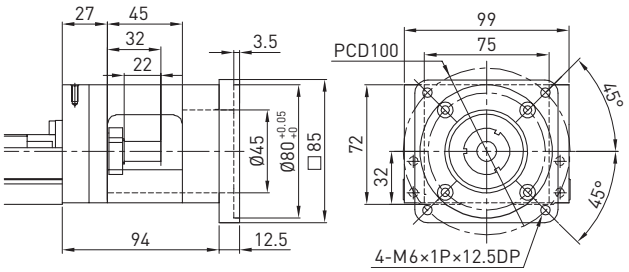

Motor adapter flange F7

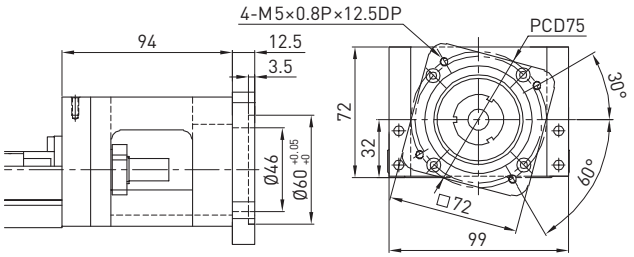

Motor adapter flange H0

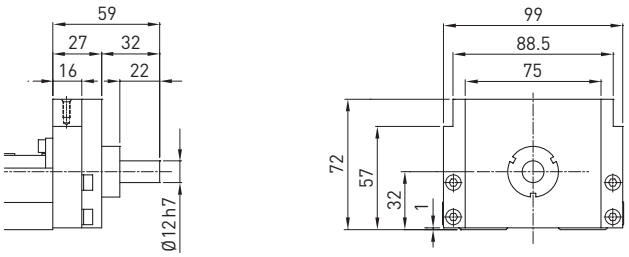

13.1.25 KK130 linear axes without cover

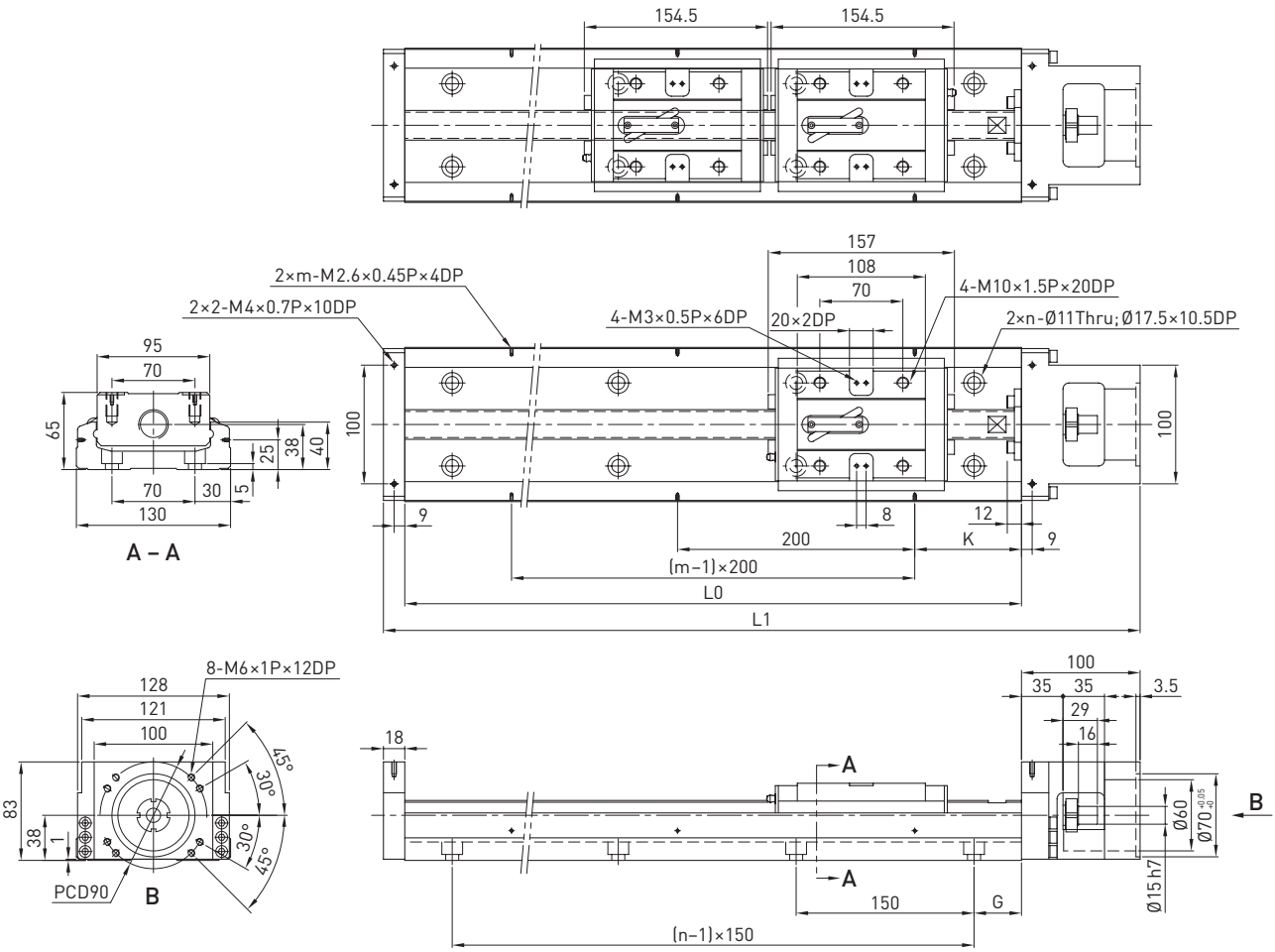

Table 13.19 **Dimensions and weights of KK130 linear axes without cover**

Model	Lead [mm]	L0 [mm]	L1 [mm]	Maximum stroke [mm]		G [mm]	K [mm]	n	m	Weight [kg]	
				Block A1	Block A2					Block A1	Block A2
KK13025P0980	25	980	1,098	811	659	40	90	7	5	29.4	32.3
KK13025P1180	25	1,180	1,298	1,011	859	65	90	8	6	34.3	37.2
KK13025P1380	25	1,380	1,498	1,211	1,059	90	90	9	7	39.2	42.1
KK13025P1680	25	1,680	1,798	1,511	1,359	90	40	11	9	46.5	49.4

Reference edge

Viewed from the motor flange, the reference edge is located on the left side of the linear axis.

13.1.26 KK130 linear axes with aluminium cover

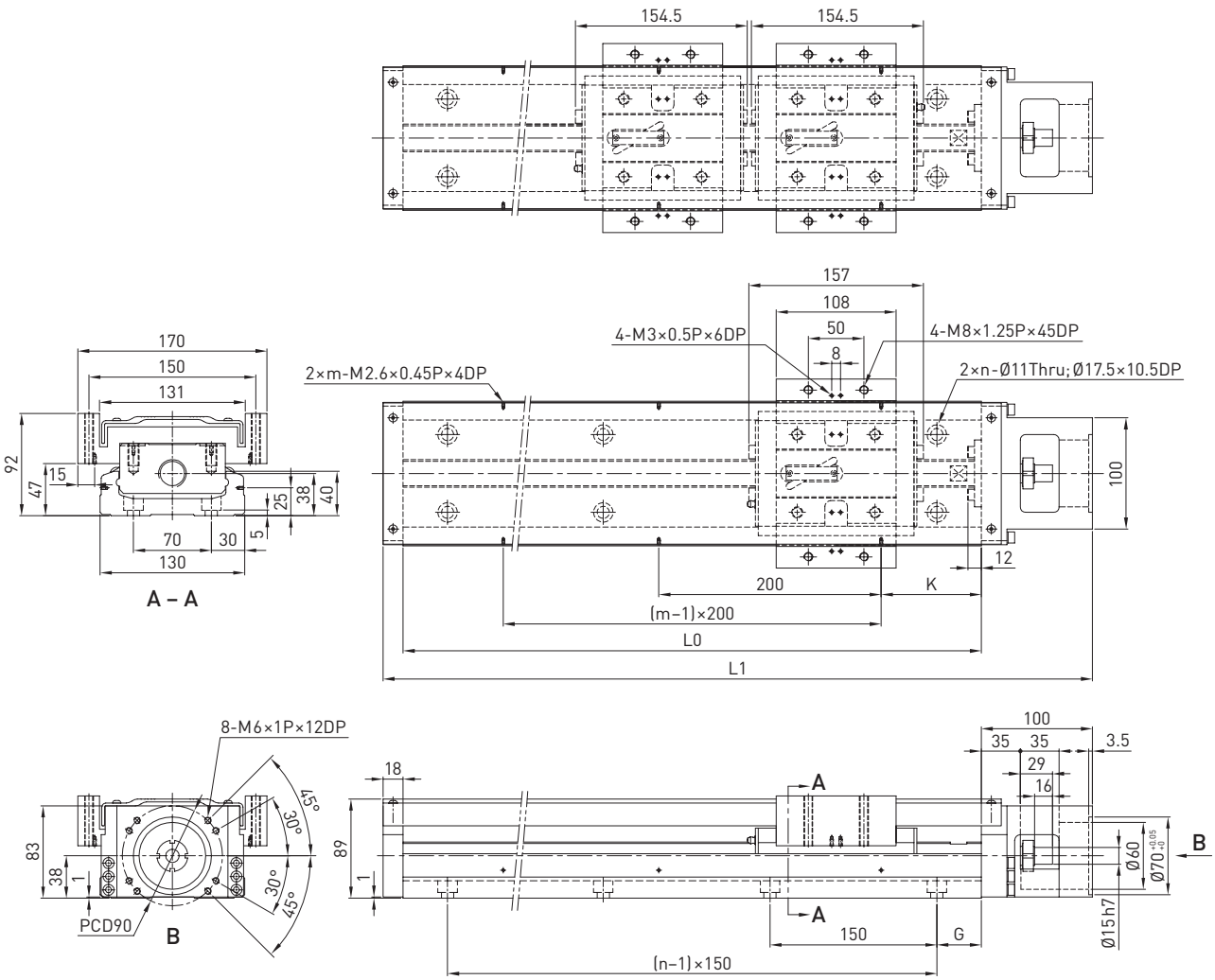

Table 13.20 **Dimensions and weights of KK130 linear axes with aluminium cover**

Model	Lead [mm]	L0 [mm]	L1 [mm]	Maximum stroke [mm]		G [mm]	K [mm]	n	m	Weight [kg]	
				Block A1	Block A2					Block A1	Block A2
KK13025P0980	25	980	1,098	811	659	40	90	7	5	31.90	35.90
KK13025P1180	25	1,180	1,298	1,011	859	65	90	8	6	37.10	41.10
KK13025P1380	25	1,380	1,498	1,211	1,059	90	90	9	7	42.20	46.20
KK13025P1680	25	1,680	1,798	1,511	1,359	90	40	11	9	49.90	53.90

Reference edge

Viewed from the motor flange, the reference edge is located on the left side of the linear axis.

13.1.27 KK130 adapter flanges

Motor adapter flange F0

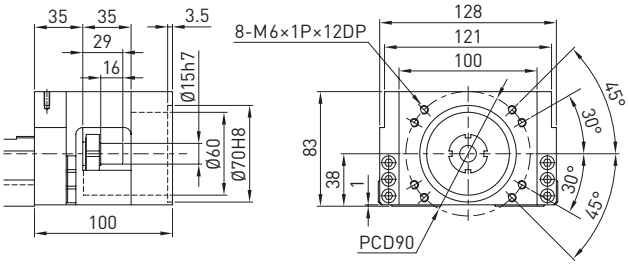

Motor adapter flange F1

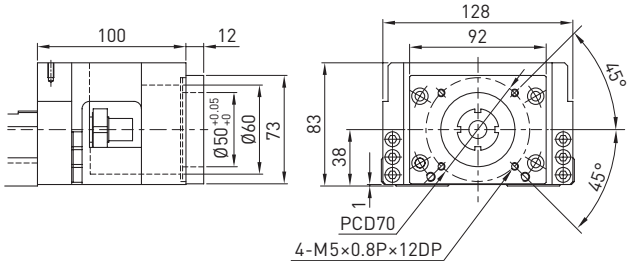

Motor adapter flange F2

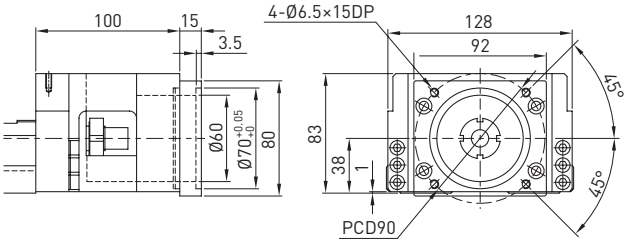

Motor adapter flange F3

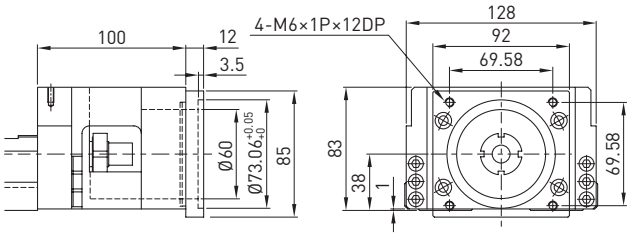

Motor adapter flange F4

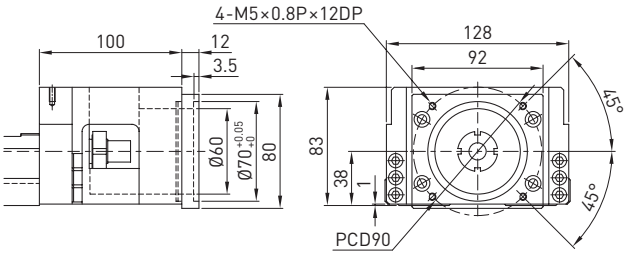

Motor adapter flange F5

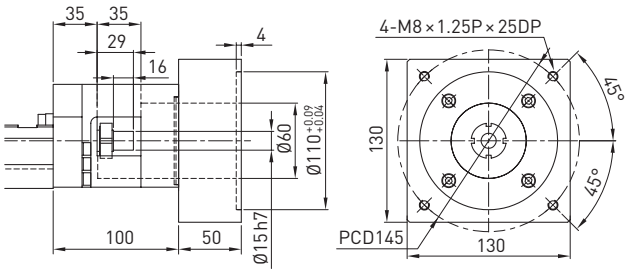

Motor adapter flange H0

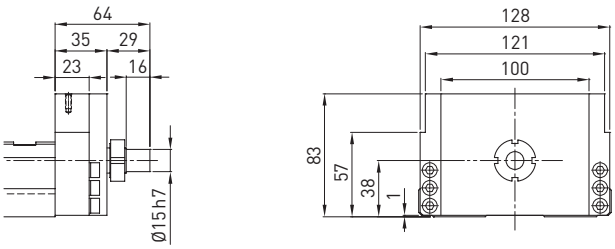

13.2 Servo motors

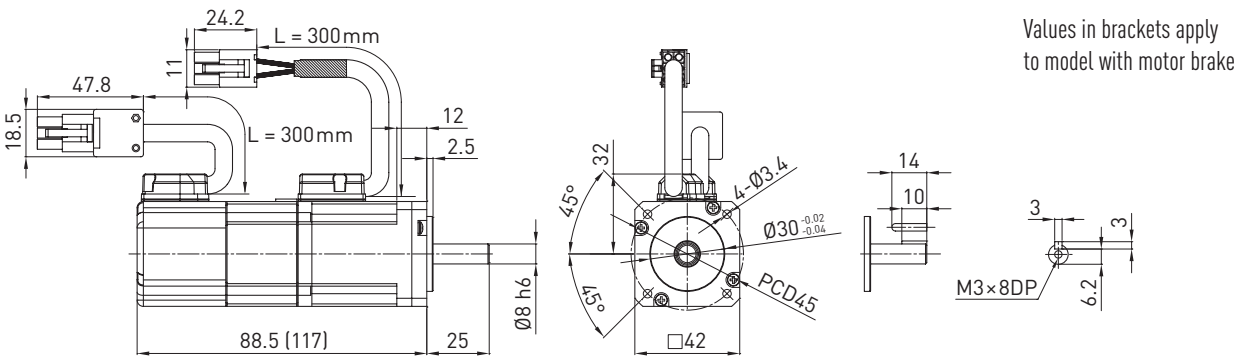

Fig. 13.1 **Dimensions FRLS 50 W**

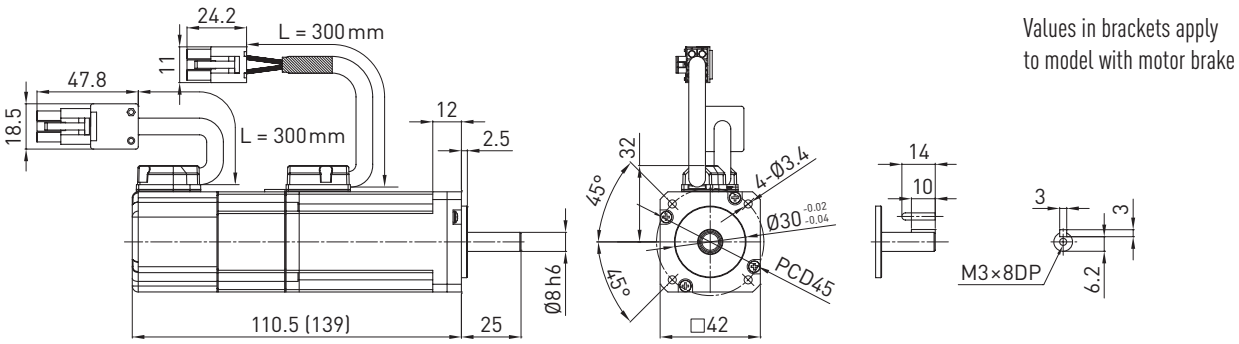

Fig. 13.2 **Dimensions FRLS 100 W**

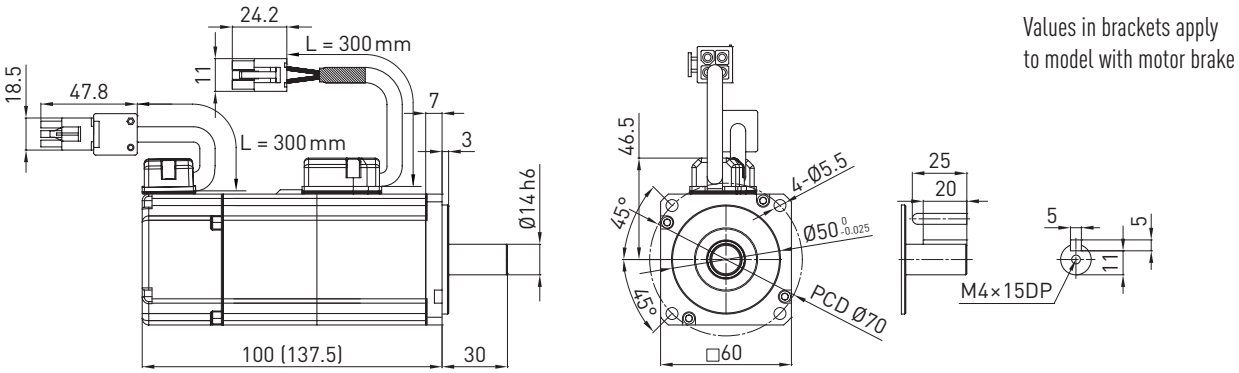

Fig. 13.3 **Dimensions FRLS 200 W**

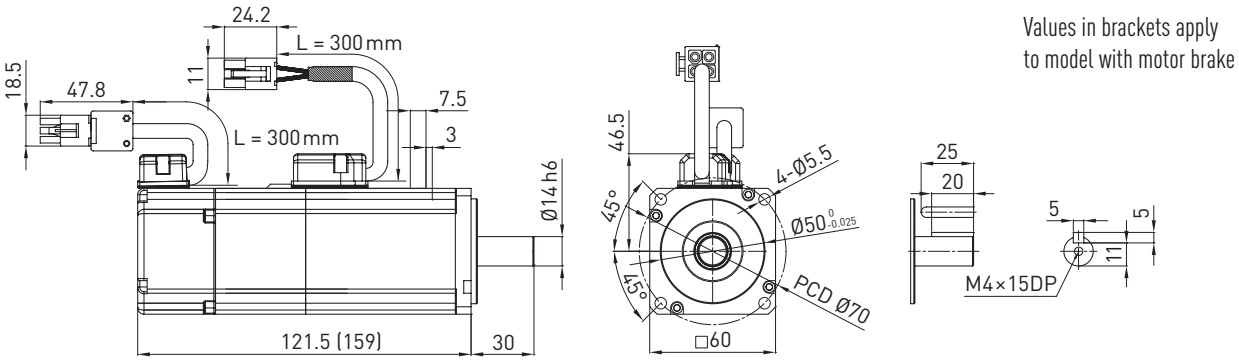

Fig. 13.4 **Dimensions FRMS 400 W**

Appendix 2: Technical data

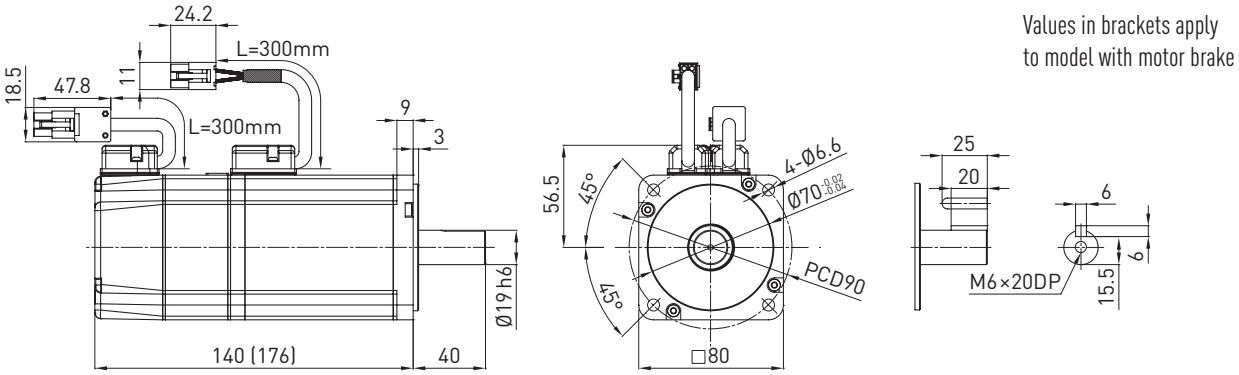

Fig. 13.5 **Dimensions FRMS 750 W**

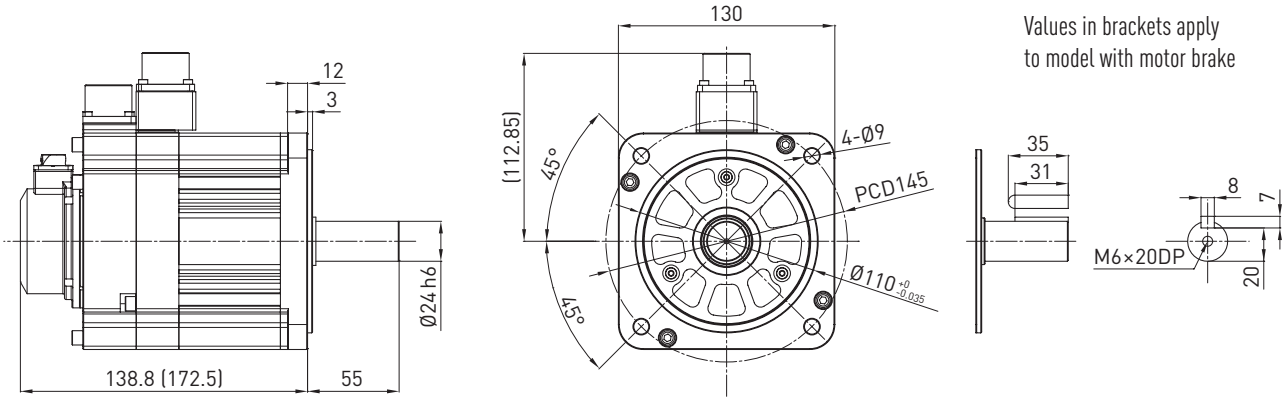

Fig. 13.6 **Dimensions FRMM 1,000 W**

14. Appendix 3: Spare parts lists

Our products are constantly subjected to technical changes and improvements. To avoid wrong deliveries and to order parts without part numbers, always quote the details on the type plate, the serial number of the linear axes, and the provided parts list.

Table 14.1 **D2T servo drive with absolute singleturn encoder**

Article number	Description
23.00058	D2T-0123-S-A4, standard, absolute singleturn encoder, 100 W [1)]
23.00055	D2T-0423-S-B4, standard, absolute singleturn encoder, 400 W [1)]
23.00056	D2T-1023-S-C4, standard, absolute singleturn encoder, 1.000 W [1)]
23.00033	D2T-0123-E-A4, EtherCAT CoE, absolute singleturn encoder, 100 W
23.00034	D2T-0423-E-B4, EtherCAT CoE, absolute singleturn encoder, 400 W
23.00035	D2T-1023-E-C4, EtherCAT CoE, absolute singleturn encoder, 1.000 W
23.00041	D2T-0123-F-A4, EtherCAT mega-ulink, absolute singleturn encoder, 100 W
23.00042	D2T-0423-F-B4, EtherCAT mega-ulink, absolute singleturn encoder, 400 W
23.00043	D2T-1023-F-C4, EtherCAT mega-ulink, absolute singleturn encoder, 1.000 W

[1)] On request from 30 pcs.

Table 14.2 **D2T servo drive with absolute Multiturn encoder**

Article number	Description
23.00065	D2T-0123-S-A5, standard, absolute multiturn encoder, 100 W
23.00066	D2T-0423-S-B5, standard, absolute multiturn encoder, 400 W
23.00069	D2T-1023-S-C5, standard, absolute multiturn encoder, 1,000 W
23.00037	D2T-0123-E-A5, EtherCAT CoE, absolute multiturn encoder, 100 W
23.00038	D2T-0423-E-B5, EtherCAT CoE, absolute multiturn encoder, 400 W
23.00039	D2T-1023-E-C5, EtherCAT CoE, absolute multiturn encoder, 1,000 W
23.00070	D2T-0123-F-A5, EtherCAT mega-ulink, absolute multiturn encoder, 100 W
23.00071	D2T-0423-F-B5, EtherCAT mega-ulink, absolute multiturn encoder, 400 W
23.00072	D2T-1023-F-C5, EtherCAT mega-ulink, absolute multiturn encoder, 1,000 W

[1)] On request from 30 pcs.

Table 14.3 **Motor coupling**

Article number	Description
8-03-0055	Motor coupling for HIWIN servo motor FRLS05, KK-40
8-03-0055	Motor coupling for HIWIN servo motor FRLS10, KK-40
8-03-0056	Motor coupling for HIWIN servo motor FRLS05, KK-50
8-03-0056	Motor coupling for HIWIN servo motor FRLS10, KK-50
8-03-0061	Motor coupling for HIWIN servo motor FRLS05, KK-60
8-03-0061	Motor coupling for HIWIN servo motor FRLS10, KK-60
8-03-0019	Motor coupling for HIWIN servo motor FRLS20, KK-86
8-03-0019	Motor coupling for HIWIN servo motor FRMS40, KK-86
8-03-0021	Motor coupling for HIWIN servo motor FRLS20, KK-100
8-03-0021	Motor coupling for HIWIN servo motor FRMS40, KK-100
8-03-0071	Motor coupling for HIWIN servo motor FRMS75, KK-100
8-03-0072	Motor coupling for HIWIN servo motor FRLS20, KK-130
8-03-0072	Motor coupling for HIWIN servo motor FRMS40, KK-130
8-03-0057	Motor coupling for HIWIN servo motor FRMS75, KK-130

Table 14.4 **AC servo motor, 17 bit absolute singleturn**

Article number	Description		
8-07-0133	FRLS05206A4A	50 W	Without brake
8-07-0092	FRLS052B6A4A	50 W	With brake
8-07-0126	FRLS10206A4A	100 W	Without brake
8-07-0093	FRLS102B6A4A	100 W	With brake
8-07-0134	FRLS2020606A	200 W	Without brake
8-07-0094	FRLS202B606A	200 W	With brake
8-07-0135	FRMS4020606A	400 W	Without brake
8-07-0136	FRMS402B606A	400 W	With brake
8-07-0137	FRMS7520608A	750 W	Without brake
8-07-0096	FRMS752B608A	750 W	With brake
8-07-0138	FRMM1K20613A	1,000 W	Without brake
8-07-0097	FRMM1K2B613A	1,000 W	With brake

Table 14.5 **AC servo motor, 17 bit absolute multiturn**

Article number	Description		
8-07-0139	FRLS05204A4A	50 W	Without brake
8-07-0085	FRLS052B4A4A	50 W	With brake
8-07-0124	FRLS10204A4A	100 W	Without brake
8-07-0086	FRLS102B4A4A	100 W	With brake
8-07-0123	FRLS2020406A	200 W	Without brake
8-07-0087	FRLS202B406A	200 W	With brake
8-07-0140	FRMS4020406A	400 W	Without brake
8-07-0141	FRMS402B406A	400 W	With brake
8-07-0142	FRMS7520408A	750 W	Without brake
8-07-0089	FRMS752B408A	750 W	With brake
8-07-0143	FRMM1K20413A	1,000 W	Without brake
8-07-0090	FRMM1K2B413A	1,000 W	With brake

Table 14.6 **Bearing housing**

Article number	Description
10-000596	Bearing housing KK-40-H0
10-000597	Bearing housing KK-50-H0
10-000598	Bearing housing KK-60-H0
10-000599	Bearing housing KK-60-H1
10-000600	Bearing housing KK-86-H0
10-000601	Bearing housing KK-100-H0
10-000602	Bearing housing KK-130-H0

Table 14.7 **Motor adapter flanges**

Article number	Description
10-000717	Motor adapter flange KK-30-F1
10-000718	Motor adapter flange KK-30-F2
10-000719	Motor adapter flange KK-30-F3
10-000446	Motor adapter flange KK-40-F1
10-000447	Motor adapter flange KK-40-F2
10-000448	Motor adapter flange KK-40-F3
10-000596	Motor adapter flange KK-40-H0
10-000449	Motor adapter flange KK-50-F1
10-000450	Motor adapter flange KK-50-F2
10-000451	Motor adapter flange KK-50-F3
10-000597	Motor adapter flange KK-50-H0
10-000457	Motor adapter flange KK-60-F1
10-000458	Motor adapter flange KK-60-F2
10-000459	Motor adapter flange KK-60-F3
10-000460	Motor adapter flange KK-60-F4
10-000461	Motor adapter flange KK-60-F5
10-000462	Motor adapter flange KK-60-F6
10-000464	Motor adapter flange KK-60-F8
10-000466	Motor adapter flange KK-60-F10
10-000598	Motor adapter flange KK-60-H0
10-000599	Motor adapter flange KK-60-H1
10-000468	Motor adapter flange KK-86-F1
10-000469	Motor adapter flange KK-86-F2
10-000470	Motor adapter flange KK-86-F3
10-000471	Motor adapter flange KK-86-F4
10-000472	Motor adapter flange KK-86-F5
10-000473	Motor adapter flange KK-86-F6
10-000474	Motor adapter flange KK-86-F7
10-000475	Motor adapter flange KK-86-F8
10-000600	Motor adapter flange KK-86-H0
10-000478	Motor adapter flange KK-100-F1
10-000479	Motor adapter flange KK-100-F2
10-000480	Motor adapter flange KK-100-F3
10-000481	Motor adapter flange KK-100-F4
10-000474	Motor adapter flange KK-100-F5
10-000475	Motor adapter flange KK-100-F7
10-000601	Motor adapter flange KK-100-H0
10-000001	Motor adapter flange KK-130-F1
10-000002	Motor adapter flange KK-130-F2
10-000003	Motor adapter flange KK-130-F3
10-000004	Motor adapter flange KK-130-F4
10-000634	Motor adapter flange KK-130-F5
10-000602	Motor adapter flange KK-130-H0

Table 14.8 **Cam switch**

Article number	Description
10-000540	Cam switch KK40
10-000541	Cam switch KK50
10-000542	Cam switch KK60
10-000543	Cam switch KK86
10-000544	Cam switch KK100
10-000019	Cam switch KK130
10-000545	Cam switch KK40 with adapter plate
10-000546	Cam switch KK50 with adapter plate
10-000547	Cam switch KK60 with adapter plate
10-000548	Cam switch KK86 with adapter plate
10-000549	Cam switch KK100 + KK130 with adapter plate

Table 14.9 **Sensor rail**

Article number	Description	
10-000483	Sensor rail KKx4001P100A1	(KK-40; L = 100 mm)
10-000661	Sensor rail KKx4001P100A1xxC	(KK-40 with adapter plate; L = 100 mm)
10-000484	Sensor rail KKx4001P150A1	(KK-40; L = 150 mm)
10-000662	Sensor rail KKx4001P150A1xxC	(KK-40 with adapter plate; L = 150 mm)
10-000485	Sensor rail KKx4001P200A1	(KK-40; L = 200 mm)
10-000663	Sensor rail KKx4001P200A1xxC	(KK-40 with adapter plate; L = 200 mm)
10-000486	Sensor rail KKx5002P150A1	(KK-50; L = 150 mm)
10-000664	Sensor rail KKx5001P150A1xxC	(KK-50 with adapter plate; L = 150 mm)
10-000487	Sensor rail KKx5002P200A1	(KK-50; L = 200 mm)
10-000665	Sensor rail KKx5001P200A1xxC	(KK-50 with adapter plate; L = 200 mm)
10-000488	Sensor rail KKx5002P250A1	(KK-50; L = 250 mm)
10-000666	Sensor rail KKx5001P250A1xxC	(KK-50 with adapter plate; L = 250 mm)
10-000489	Sensor rail KKx5002P300A1	(KK-50; L = 300 mm)
10-000667	Sensor rail KKx5001P300A1xxC	(KK-50 with adapter plate; L = 300 mm)
10-000490	Sensor rail KKx60xxP150EA1	(KK-60; L = 150 mm)
10-000668	Sensor rail KKx60xxP150A1xxC	(KK-60 with adapter plate; L = 150 mm)
10-000491	Sensor rail KKx60xxP200EA1	(KK-60; L = 200 mm)
10-000669	Sensor rail KKx60xxP200A1xxC	(KK-60 with adapter plate; L = 200 mm)
10-000492	Sensor rail KKx60xxP300EA1	(KK-60; L = 300 mm)
10-000670	Sensor rail KKx60xxP300A1xxC	(KK-60 with adapter plate; L = 300 mm)
10-000493	Sensor rail KKx60xxP400EA1	(KK-60; L = 400 mm)
10-000671	Sensor rail KKx60xxP400A1xxC	(KK-60 with adapter plate; L = 400 mm)
10-000494	Sensor rail KKx60xxP500EA1	(KK-60; L = 500 mm)
10-000672	Sensor rail KKx60xxP500A1xxC	(KK-60 with adapter plate; L = 500 mm)
10-000495	Sensor rail KKx60xxP600EA1	(KK-60; L = 600 mm)
10-000673	Sensor rail KKx60xxP600A1xxC	(KK-60 with adapter plate; L = 600 mm)
10-000496	Sensor rail KKx86xxP340A1	(KK-86; L = 340 mm)
10-000674	Sensor rail KKx86xxP340A1xxC	(KK-86 with adapter plate; L = 340 mm)
10-000497	Sensor rail KKx86xxP440A1	(KK-86; L = 440 mm)
10-000675	Sensor rail KKx86xxP440A1xxC	(KK-86 with adapter plate; L = 440 mm)
10-000498	Sensor rail KKx86xxP540A1	(KK-86; L = 540 mm)
10-000676	Sensor rail KKx86xxP540A1xxC	(KK-86 with adapter plate; L = 540 mm)

Table 14.9 **Sensor rail (continued)**

Article number	Description	
10-000499	Sensor rail KKx86xxP640A1	(KK-86; L = 640 mm)
10-000677	Sensor rail KKx86xxP640A1xxC	(KK-86 with adapter plate; L = 640 mm)
10-000500	Sensor rail KKx86xxP740A1	(KK-86; L = 740 mm)
10-000678	Sensor rail KKx86xxP740A1xxC	(KK-86 with adapter plate; L = 740 mm)
10-000501	Sensor rail KKx86xxP940A1	(KK-86; L = 940 mm)
10-000679	Sensor rail KKx86xxP940A1xxC	(KK-86 with adapter plate; L = 940 mm)
10-000502	Sensor rail KKx10020P980A1	(KK-100; L = 980 mm)
10-000680	Sensor rail KKx10020P980A1xxC	(KK-100 with adapter plate; L = 980 mm)
10-000503	Sensor rail KKx10020P1080A1	(KK-100; L = 1,080 mm)
10-000681	Sensor rail KKx10020P1080A1xxC	(KK-100 with adapter plate; L = 1,080 mm)
10-000504	Sensor rail KKx10020P1180A1	(KK-100; L = 1,180 mm)
10-000682	Sensor rail KKx10020P1180A1xxC	(KK-100 with adapter plate; L = 1,180 mm)
10-000505	Sensor rail KKx10020P1280A1	(KK-100; L = 1,280 mm)
10-000683	Sensor rail KKx10020P1280A1xxC	(KK-100 with adapter plate; L = 1,280 mm)
10-000506	Sensor rail KKx10020P1380A1	(KK-100; L = 1,380 mm)
10-000684	Sensor rail KKx10020P1380A1xxC	(KK-100 with adapter plate; L = 1,380 mm)
10-000010	Sensor rail KKx13025P980A1	(KK-130; L = 980 mm)
10-000685	Sensor rail KKx13025P980A1xxC	(KK-130 with adapter plate; L = 980 mm)
10-000011	Sensor rail KKx13025P1180A1	(KK-130; L = 1,180 mm)
10-000686	Sensor rail KKx13025P1180A1xxC	(KK-130 with adapter plate; L = 1,180 mm)
10-000012	Sensor rail KKx13025P1380A1	(KK-130; L = 1,380 mm)
10-000687	Sensor rail KKx13025P1380A1xxC	(KK-130 with adapter plate; L = 1,380 mm)
10-000013	Sensor rail KKx13025P1680A1	(KK-130; L = 1,680 mm)
10-000688	Sensor rail KKx13025P1680A1xxC	(KK-130 with adapter plate; L = 1,680 mm)

Table 14.10 **Switch set**

Article number	Description
8-11-0264	Switch set, cable length 4 m, NC
8-11-0276	Switch set, cable length 2 m, NO

Table 14.11 **Aluminium cover**

Article number	Description
10-000720	Aluminium cover, KK-30-75
10-000721	Aluminium cover, KK-30-100
10-000722	Aluminium cover, KK-30-125
10-000723	Aluminium cover, KK-30-150
10-000724	Aluminium cover, KK-30-175
10-000725	Aluminium cover, KK-30-200
10-000726	Adapter set for second block A2, KK30
10-000507	Aluminium cover, KK-40-100
10-000508	Aluminium cover, KK-40-150
10-000509	Aluminium cover, KK-40-200
10-000510	Adapter set for second block A2, KK40
10-000511	Aluminium cover, KK-50-150

Table 14.11 **Aluminium cover (continued)**

Article number	Description
10-000512	Aluminium cover, KK-50-200
10-000513	Aluminium cover, KK-50-250
10-000514	Aluminium cover, KK-50-300
10-000515	Adapter set for second block A2, KK50
10-000516	Aluminium cover, KK-60-150
10-000517	Aluminium cover, KK-60-200
10-000518	Aluminium cover, KK-60-300
10-000519	Aluminium cover, KK-60-400
10-000520	Aluminium cover, KK-60-500
10-000521	Aluminium cover, KK-60-600
10-000522	Adapter set for second block A2, KK60
10-000523	Aluminium cover, KK-86-340
10-000524	Aluminium cover, KK-86-440
10-000525	Aluminium cover, KK-86-540
10-000526	Aluminium cover, KK-86-640
10-000527	Aluminium cover, KK-86-740
10-000529	Aluminium cover, KK-86-940
10-000530	Adapter set for second block A2, KK86
10-000531	Aluminium cover, KK-100-980
10-000532	Aluminium cover, KK-100-1080
10-000533	Aluminium cover, KK-100-1180
10-000535	Aluminium cover, KK-100-1280
10-000550	Aluminium cover, KK-100-1380
10-000537	Adapter set for second block A2, KK100
10-000014	Aluminium cover, KK-130-980
10-000015	Aluminium cover, KK-130-1180
10-000016	Aluminium cover, KK-130-1380
10-000017	Aluminium cover, KK-130-1680
10-000018	Adapter set for second block A2, KK130

Table 14.12 **Bellow cover**

Article number	Description
10-000108	Bellow cover, KK-60-150
10-000110	Bellow cover, KK-60-200
10-000112	Bellow cover, KK-60-300
10-000114	Bellow cover, KK-60-400
10-000116	Bellow cover, KK-60-500
10-000118	Bellow cover, KK-60-600
10-000168	Bellow cover, KK-86-340
10-000170	Bellow cover, KK-86-440
10-000175	Bellow cover, KK-86-540
10-000177	Bellow cover, KK-86-640
10-000180	Bellow cover, KK-86-740
10-000183	Bellow cover, KK-86-940

Table 14.13 **Cross table adapter**

	Cross table adapter set	Pos. 1 (1 piece)	Pos. 2 (1 piece)	Pos. 3 (1 piece)	Pos. 4 (4 pieces)	Pos. 5 (2 pieces)	Pos. 6 (4 pieces)
Without aluminium cover	10-000604	KK40	10-000568	KK40	20-000188	20-000475	20-000185
	10-000606	KK50	10-000573	KK40	20-000188	20-000475	20-000191
	10-000608	KK50	10-000570	KK50	20-000192	20-000475	20-000191
	10-000610	KK60	10-000574	KK50	20-000192	20-000475	20-000084
	10-000612	KK60	10-000571	KK60	20-000084	20-000475	20-000084
	10-000614	KK86	10-000575	KK60	20-000084	20-000475	20-000478
	10-000616	KK86	10-000572	KK86	20-000095	20-000476	20-000478
With aluminium cover	10-000605	KK40	10-000569	KK40	20-000188	20-000475	20-000477
	10-000607	KK50	10-000579	KK40	20-000187	20-000475	20-000192
	10-000609	KK50	10-000576	KK50	20-000191	20-000475	20-000192
	10-000611	KK60	10-000580	KK50	20-000192	20-000475	20-000085
	10-000613	KK60	10-000577	KK60	20-000084	20-000475	20-000085
	10-000615	KK86	10-000581	KK60	20-000084	20-000475	20-000478
	10-000617	KK86	10-000578	KK86	20-000478	20-000476	20-000478

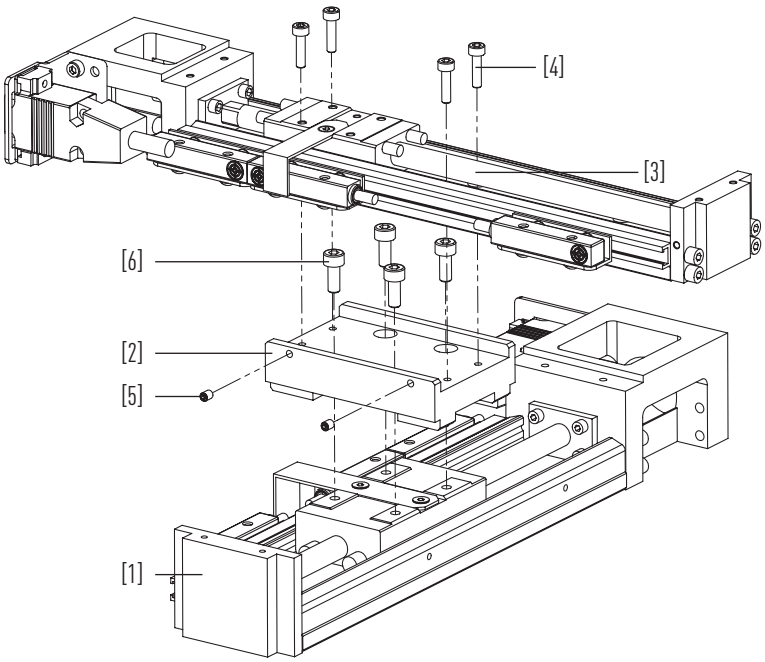

15. Appendix 4: Declaration of Incorporation

in the sense of the EC Machinery Directive 2006/42/EC, Annex II 1. B for partly completed machinery

The manufacturer	HIWIN GmbH, Brücklesbünd 2, 77654 Offenburg
Documentation department:	HIWIN GmbH, Brücklesbünd 2, 77654 Offenburg

Description and identification of the partly completed machine:

Product:	Linear axis KK
Type:	KK_30..., KK_40..., KK_50..., KK_60..., KK_86..., KK_100..., KK_130...
Year of manufacture:	from 2018

It is hereby declared that the following essential requirements of the Machinery Directive 2006/42/EC have been fulfilled.
1.1.3, 1.1.5, 1.2.1, 1.3.3, 1.3.4, 1.3.7, 1.3.9, 1.5.1, 1.5.8, 1.5.9, 1.6.2, 1.6.3, 1.5.5, 1.1.2, 1.3.2, 1.5.4

Moreover, it is declared that the relevant technical documentation specified under Annex VII Part B has been compiled.
It is hereby explicitly declared that the partly completed machine complies with all of the pertinent conditions in the following EC Directives.

2006/42/EC	EC Machinery Directive
2014/30/EU	Directive on electromagnetic compatibility
2011/65/EU	RoHS Directive on the restriction of hazardous substances

A reference to the harmonised standards used, as referred to in Article 7(2)

EN ISO 13732-1:2008	Ergonomics of the thermal environment – Methods for the assessment of human responses to contact with surfaces – Part 1: Hot surfaces (ISO 13732-1:2008)
EN ISO 12100:2010-11	Safety of machinery – General principles for design – Risk assessment and risk reduction (ISO 12100:2010)
EN 60204-1:2006/AC:2010	Safety of machinery – Electrical equipment of machines – Part 1: General requirements
EN ISO 13849-1:2016-06	Safety of machinery – Safety-related parts of control systems – Part 1: General principles for design
EN ISO 13849-2:2012	Safety of machinery – Safety-related parts of control systems – Part 2: Validation

The manufacturer or the authorised person undertakes to transmit, in response to a reasoned request by the national authorities, the relevant documentation on the partly completed machinery.

This is without prejudice to the intellectual property rights of the manufacturer!

Important note! The partly completed machinery may not be commissioned until it has been ascertained that the machinery into which this partly completed machinery is to be incorporated is compliant with the provisions of this Directive.

Offenburg, 20.01.2018

Werner Mäurer,
Managing Director

Linear Guideways

Ballscrews

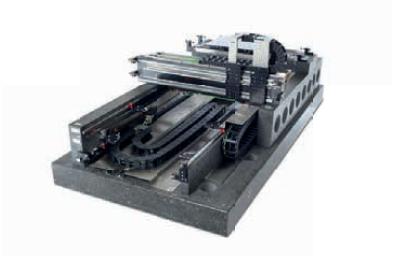

Linear Motor Systems

Linear Axes

Linear Actuators

Robots

Linear Motor Components

Rotary Tables

Drives & Servo Motors

Germany
HIWIN GmbH
Brücklesbünd 2
D-77654 Offenburg
Phone +49 (0) 7 81 9 32 78 - 0
Fax +49 (0) 7 81 9 32 78 - 90
info@hiwin.de
www.hiwin.de

Taiwan
Headquarters
HIWIN Technologies Corp.
No. 7, Jingke Road
Taichung Precision Machinery Park
Taichung 40852, Taiwan
Phone +886-4-2359-4510
Fax +886-4-2359-4420
business@hiwin.tw
www.hiwin.tw

Taiwan
Headquarters
HIWIN Mikrosystem Corp.
No. 6, Jingke Central Road
Taichung Precision Machinery Park
Taichung 40852, Taiwan
Phone +886-4-2355-0110
Fax +886-4-2355-0123
business@hiwinmikro.tw
www.hiwinmikro.tw

Italy
HIWIN Srl
Via Pitagora 4
I-20861 Brugherio (MB)
Phone +39 039 287 61 68
Fax +39 039 287 43 73
info@hiwin.it
www.hiwin.it

Poland
HIWIN GmbH
ul. Puławska 405a
PL-02-801 Warszawa
Phone +48 22 544 07 07
Fax +48 22 544 07 08
info@hiwin.pl
www.hiwin.pl

Switzerland
HIWIN Schweiz GmbH
Eichwiesstrasse 20
CH-8645 Jona
Phone +41 (0) 55 225 00 25
Fax +41 (0) 55 225 00 20
info@hiwin.ch
www.hiwin.ch

Slovakia
HIWIN s.r.o., o.z.z.o.
Mládežnicka 2101
SK-01701 Považská Bystrica
Phone +421 424 43 47 77
Fax +421 424 26 23 06
info@hiwin.sk
www.hiwin.sk

Czech Republic
HIWIN s.r.o.
Medkova 888/11
CZ-62700 Brno
Phone +42 05 48 528 238
Fax +42 05 48 220 223
info@hiwin.cz
www.hiwin.cz

France
HIWIN GmbH
info@hiwin.de
www.hiwin.de/fr

Netherlands
HIWIN GmbH
info@hiwin.nl
www.hiwin.nl

Austria
HIWIN GmbH
info@hiwin.at
www.hiwin.at

Slovenia
HIWIN GmbH
info@hiwin.si
www.hiwin.si

Hungary
HIWIN GmbH
info@hiwin.hu
www.hiwin.hu

China
HIWIN Corp.
www.hiwin.cn

Japan
HIWIN Corp.
mail@hiwin.co.jp
www.hiwin.co.jp

USA
HIWIN Corp.
info@hiwin.com
www.hiwin.com

Korea
HIWIN Corp.
www.hiwin.kr

Singapore
HIWIN Corp.
www.hiwin.sg

KK-04-1-EN-1809-MA