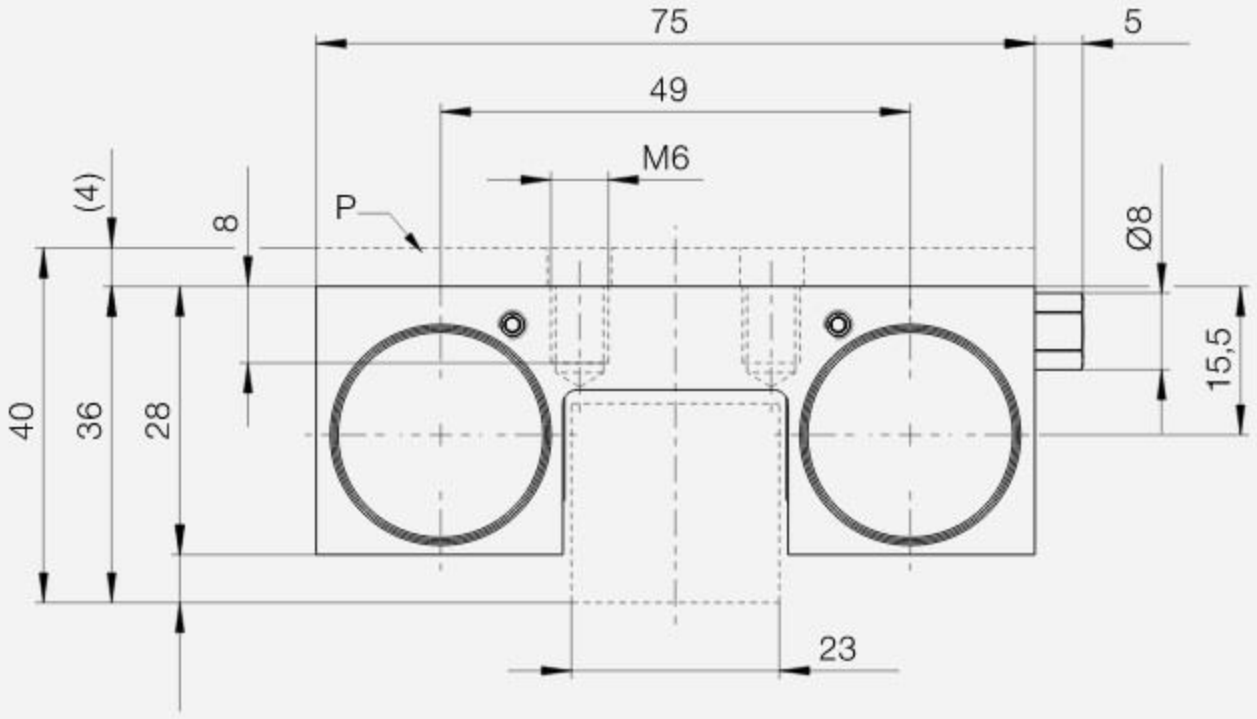

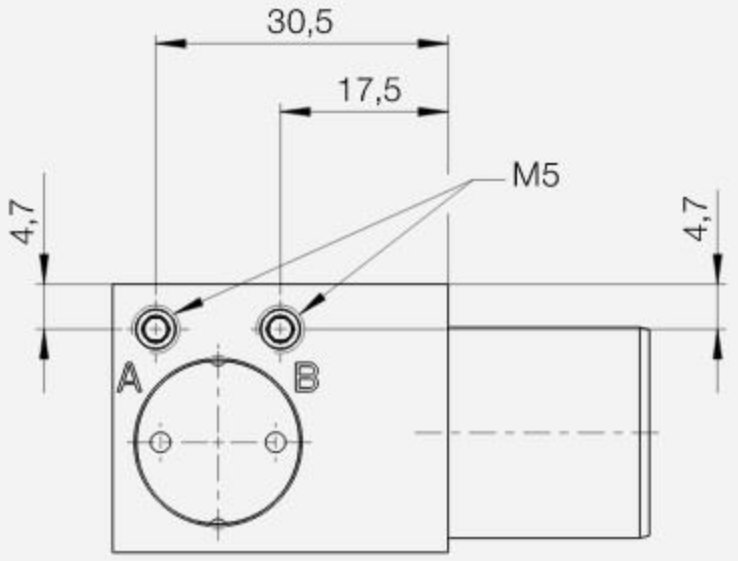

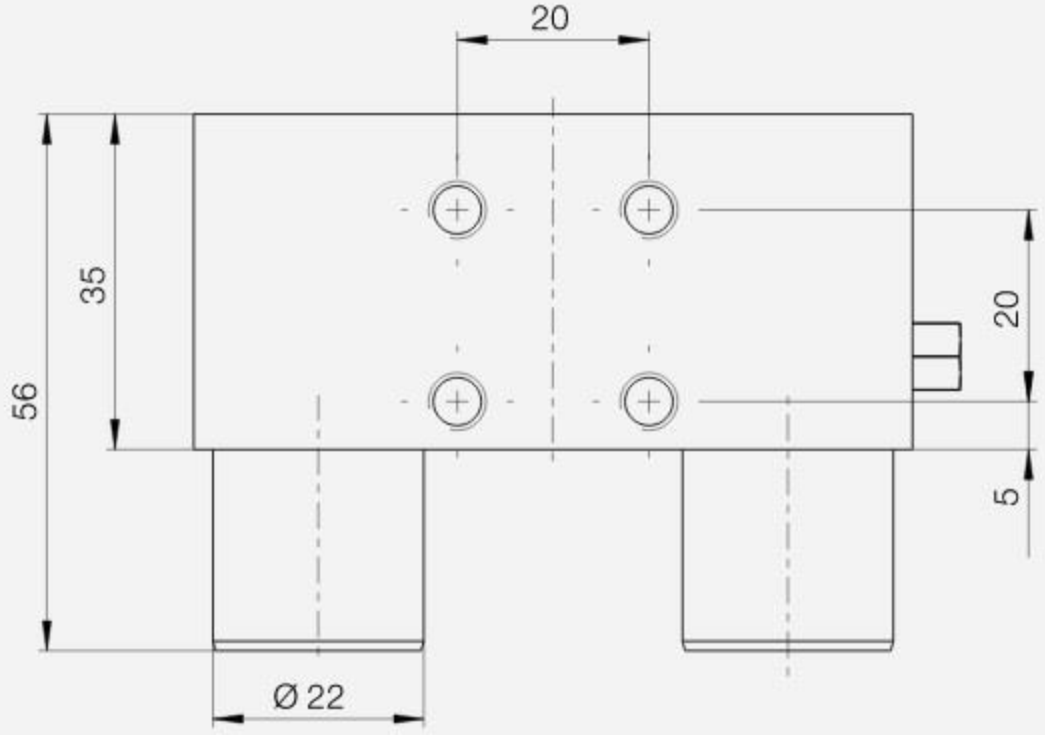

MKS2501A+PMK25-4